Sales Code: URB1404A

Barcode: 5056678415887

Brand: Hudson Reed

Description: Hudson Reed Urban Soft Black 600mm 2 Drawer Wall Hung Vanity Unit With Mid-Edge Basin



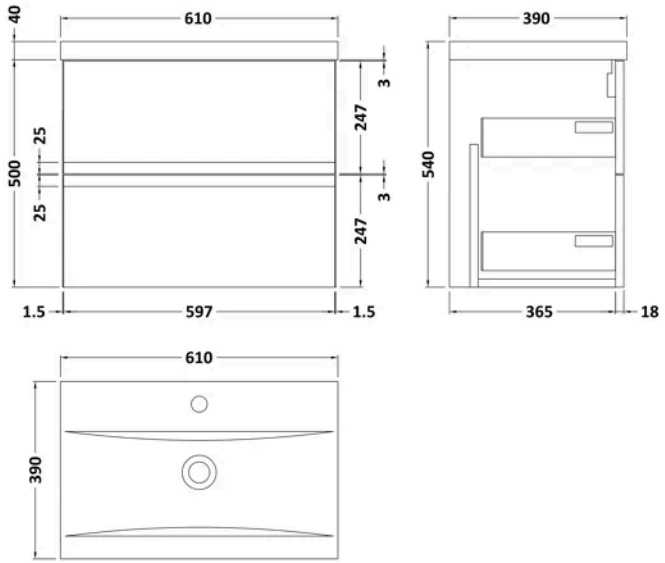

Product Dimensions

Product	540 x 610 x 390mm (H x W x D)
Packaged	550 x 550 x 550mm (H x W x D)
Nett Weight	28 kg
Packaged Weight	28.5 kg

Packaging Details

Box Qty	2

Product Details

Country of Origin	China
Product Material	Mfc Painted Matt
Colour/Finish	Soft Black
Mount Type	Wall Hung
Style	Contemporary
Handle Type	Handleless
Construction Method	Cam & Wood Dowel
Construction Type	Rigid
Drawer Type	80mm High Metal Soft-close
Fascia Finish	Mfc Painted Matt
Fsc Certified	Yes
Handles Included	No
Inner Bowl Height	125 mm
Leg Set Included	No
Material Thickness	18 mm
No. Drawers	2
No. Of Tapholes	1
Number Of Bowls	1
Overflow Included	Yes
Tap Included	No
Waste Included	No
Waste Shroud	Yes

© ROXOR Group

Sales Code: NVM013 **Barcode:** 5055369043415 **Brand:** nuie **Description:** 1 Tap Hole 600mm Mid-Edge Ceramic Basin



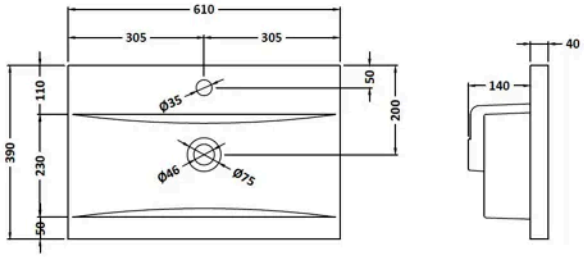

Product Dimensions

Product	180 x 610 x 390mm (H x W x D)
Packaged	195 x 410 x 630mm (H x W x D)
Nett Weight	10 kg
Packaged Weight	11.2 kg

Packaging Details

Box Qty	1

Product Details

Country of Origin	China
Product Material	Vitreous China
Colour/Finish	White
Style	Contemporary
Ce Certified	Yes
Inner Bowl Height	125 mm
No. Of Tapholes	1
Number Of Bowls	1
Overflow Included	Yes
Tap Included	No
Waste Included	No

© ROXOR Group

Sales Code: URB1493 **Barcode:** 5056678402863 **Brand:** Hudson Reed **Description:** Hudson Reed Urban 600mm Gloss Grey 2 Drawer Vanity Unit



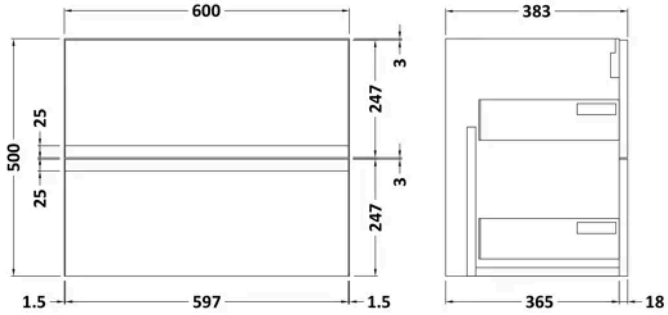

Product Dimensions

Product	500 x 610 x 383mm (H x W x D)
Packaged	500 x 595 x 383mm (H x W x D)
Nett Weight	18.5 kg
Packaged Weight	19 kg

Packaging Details

Box Qty	1

Product Details

Country of Origin	China
Product Material	Mfc Painted Gloss
Colour/Finish	Gloss Grey
Style	Contemporary
Construction Method	Cam & Wood Dowel
Construction Type	Rigid
Fascia Finish	Mfc Painted Gloss
Handles Included	No
Material Thickness	18 mm
No. Drawers	2

© ROXOR Group