**Sales Code:** URB1402B

**Barcode:** 5056678415771

**Brand:** Hudson Reed

**Description:** Hudson Reed Urban Soft Black 500mm 2 Drawer Wall Hung Vanity Unit With Minimalist Basin



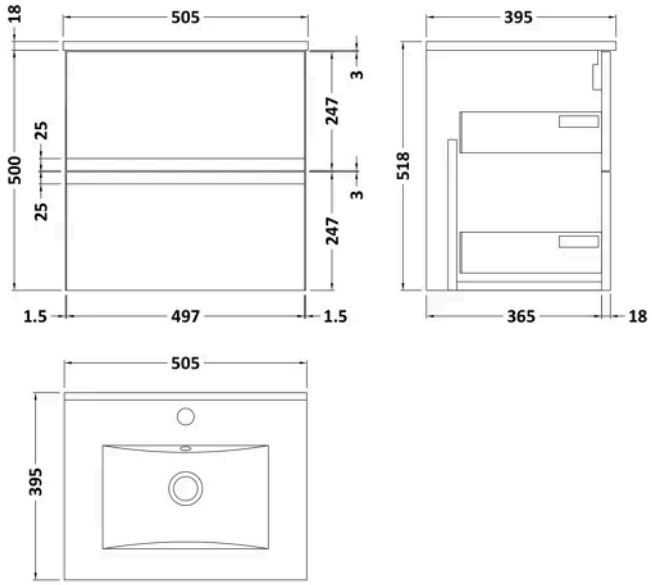


## Product Dimensions

| | |
|---|---|
| Product | 518 x 510 x 390mm (H x W x D) |
| Packaged | 550 x 550 x 550mm (H x W x D) |
| Nett Weight | 27 kg |
| Packaged Weight | 27.5 kg |

## Packaging Details

| | |
|---|---|
| Box Qty | 2 |

## Product Details

| | |
|---|---|
| Country of Origin | China |
| Product Material | Mfc Painted Matt |
| Colour/Finish | Soft Black |
| Mount Type | Wall Hung |
| Style | Contemporary |
| Handle Type | Handleless |
| Construction Method | Cam & Wood Dowel |
| Construction Type | Rigid |
| Drawer Type | 80mm High Metal Soft-close |
| Fascia Finish | Mfc Painted Matt |
| Fsc Certified | Yes |
| Handles Included | No |
| Inner Bowl Height | 120 mm |
| Leg Set Included | No |
| Material Thickness | 18 mm |
| No. Drawers | 2 |
| No. Of Tapholes | 1 |
| Number Of Bowls | 1 |
| Overflow Included | Yes |
| Tap Included | No |
| Waste Included | No |
| Waste Shroud | Yes |

© ROXOR Group

**Sales Code:** NVM001 **Barcode:** 5055275828670 **Brand:** nuie **Description:** 1 Tap Hole 500mm Minimalist Ceramic Basin



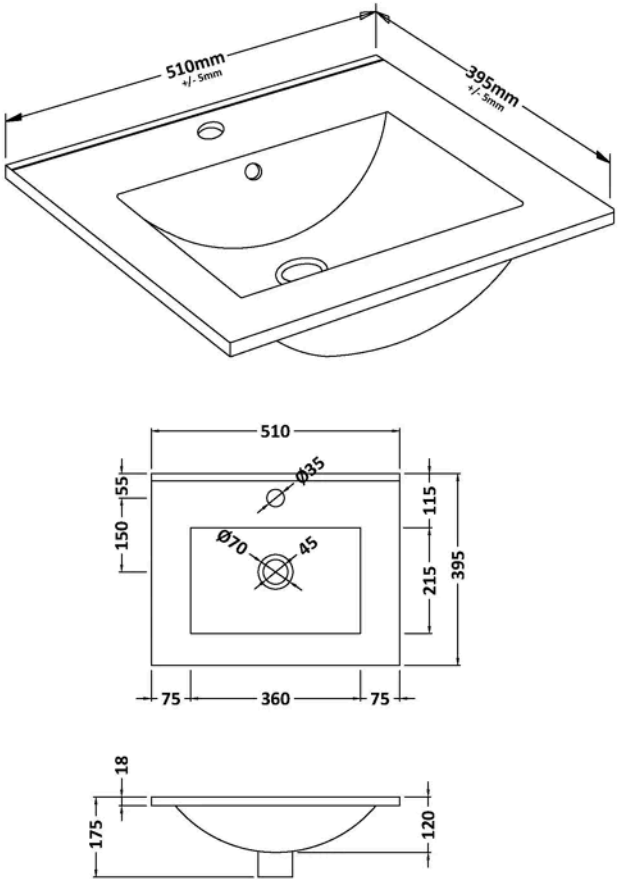


## Product Dimensions

| | |
|---|---|
| Product | 175 x 510 x 395mm (H x W x D) |
| Packaged | 400 x 520 x 200mm (H x W x D) |
| Nett Weight | 9 kg |
| Packaged Weight | 9 kg |

## Packaging Details

| | |
|---|---|
| Box Qty | 1 |

## Product Details

| | |
|---|---|
| Country of Origin | China |
| Product Material | Vitreous China |
| Colour/Finish | White |
| Style | Contemporary |
| Ce Certified | Yes |
| Inner Bowl Height | 120 mm |
| No. Of Tapholes | 1 |
| Number Of Bowls | 1 |
| Overflow Included | Yes |
| Tap Included | No |
| Waste Included | No |

© ROXOR Group

**Sales Code:** URB1492 **Barcode:** 5056678402894 **Brand:** Hudson Reed **Description:** Hudson Reed Urban 500mm Soft Black 2 Drawer Wall Hung Vanity Unit



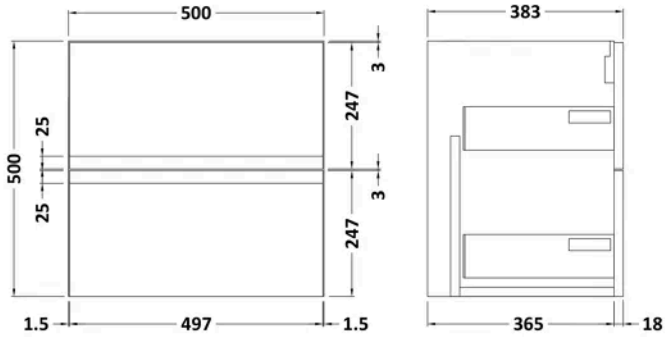


## Product Dimensions

| | |
|---|---|
| Product | 500 x 510 x 383mm (H x W x D) |
| Packaged | 500 x 495 x 383mm (H x W x D) |
| Nett Weight | 18.5 kg |
| Packaged Weight | 19 kg |

## Packaging Details

| | |
|---|---|
| Box Qty | 1 |

## Product Details

| | |
|---|---|
| Country of Origin | China |
| Product Material | Mfc Painted Gloss |
| Colour/Finish | Soft Black |
| Mount Type | Wall Hung |
| Style | Contemporary |
| Construction Method | Cam & Wood Dowel |
| Construction Type | Rigid |
| Fascia Finish | Mfc Painted Gloss |
| Handles Included | No |
| Material Thickness | 18 mm |
| No. Drawers | 2 |

© ROXOR Group