Sales Code: URB105G

Barcode: 5056462622637

Brand: Hudson Reed

Description: Hudson Reed Urban Satin White 800mm 2 Door 1 Drawer Floor Standing Vanity Unit With U-Shaped Curved Basin



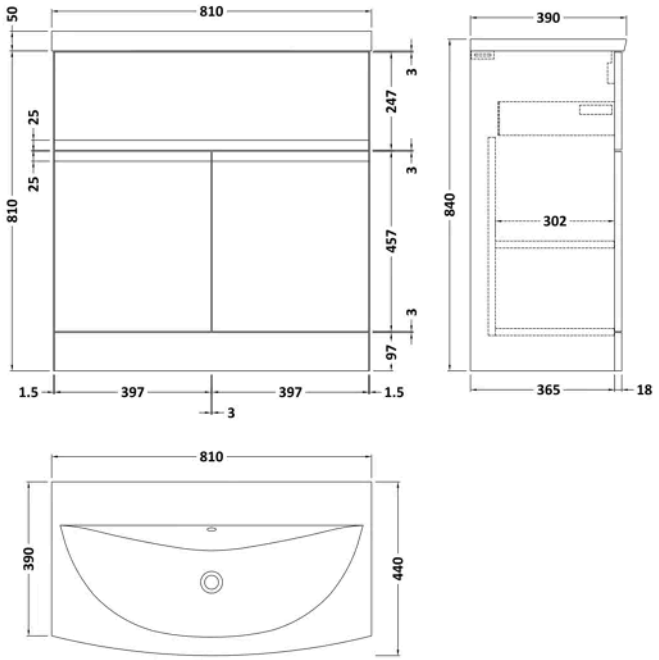

Product Dimensions

Product	860 x 810 x 395mm (H x W x D)
Nett Weight	46 kg
Packaged Weight	46.5 kg

Packaging Details

Box Qty	2

Product Details

Country of Origin	China
Product Material	Mfc Painted Matt
Colour/Finish	Satin White
Mount Type	Floor
Style	Contemporary
Handle Type	Handleless
Construction Method	Cam & Wood Dowel
Construction Type	Rigid
Drawer Type	80mm High Metal Soft-close
Fascia Finish	Mdf Painted Matt
Fsc Certified	Yes
Handles Included	No
Inner Bowl Height	125 mm
Leg Set Included	No
Material Thickness	18 mm
No. Doors	2
No. Drawers	1
No. Of Tapholes	1
No. Shelves	1
Number Of Bowls	1
Number Of Shelves	1
Overflow Included	Yes
Tap Included	No
Waste Included	No
Waste Shroud	Yes

© ROXOR Group

Sales Code: NVM045 **Barcode:** 5056462620978 **Brand:** nuie **Description:** 1 Tap Hole 800mm Curved Ceramic Basin



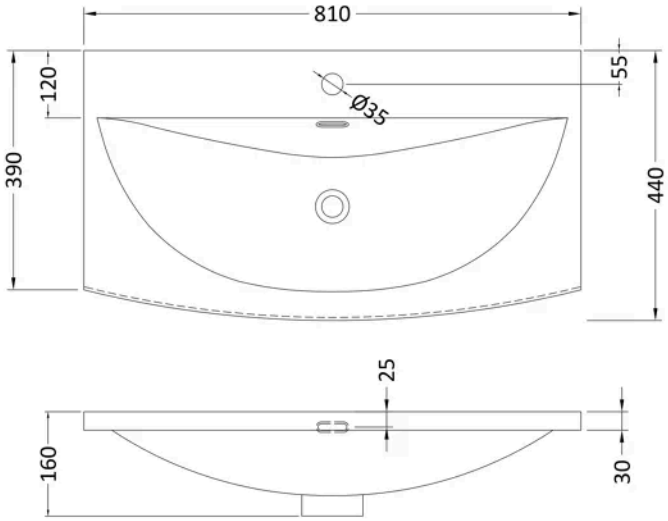

Product Dimensions

Product	160 x 810 x 440mm (H x W x D)
Packaged	190 x 830 x 415mm (H x W x D)
Nett Weight	15 kg
Packaged Weight	15.5 kg

Packaging Details

Box Qty	1

Product Details

Country of Origin	China
Product Material	Vitreous China
Colour/Finish	White
Style	Contemporary
Ce Certified	Yes
Inner Bowl Height	125 mm
No. Of Tapholes	1
Number Of Bowls	1
Overflow Included	Yes
Tap Included	No
Waste Included	No

© ROXOR Group

Sales Code: URB128 **Barcode:** 5056211890485 **Brand:** Hudson Reed **Description:** Hudson Reed Urban 800mm Gloss White 2 Door 1 Drawer Floor Standing Vanity Unit



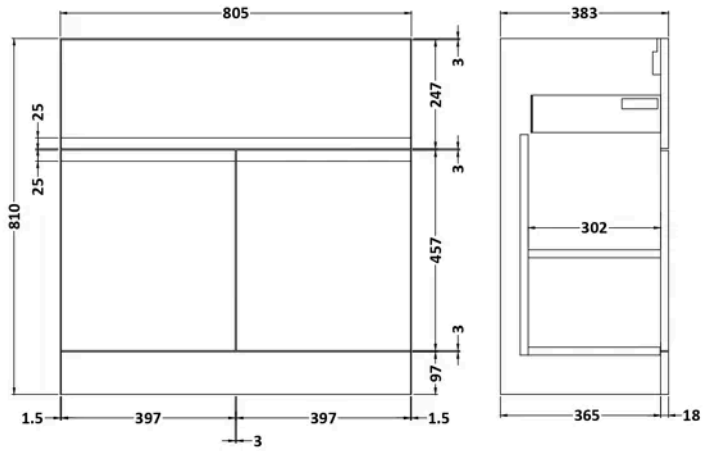

Product Dimensions

Product	810 x 810 x 383mm (H x W x D)
Packaged	780 x 795 x 383mm (H x W x D)
Nett Weight	31.5 kg
Packaged Weight	32 kg

Packaging Details

Box Qty	1

Product Details

Country of Origin	China
Product Material	Mfc Painted Gloss
Colour/Finish	Gloss White
Style	Contemporary
Construction Method	Cam & Wood Dowel
Construction Type	Rigid
Fascia Finish	Mfc Painted Gloss
Handles Included	No
Material Thickness	18 mm
No. Doors	2
No. Drawers	1

© ROXOR Group