Sales Code: URB104LBG2

Barcode: 5056678459966

Brand: Hudson Reed

Description: Hudson Reed Urban Satin White 1200mm 4 Drawer Wall Hung Vanity Unit With Bellato Grey Worktop



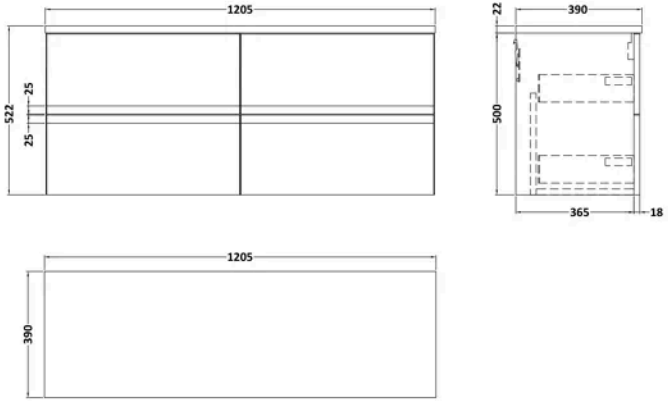

Product Dimensions

Product	522 x 1205 x 390mm (H x W x D)
Packaged	500 x 1200 x 383mm (H x W x D)
Nett Weight	41.5 kg
Packaged Weight	42 kg

Packaging Details

Box Qty	3

Product Details

Country of Origin	China
Product Material	Mfc Painted Matt
Colour/Finish	Satin White
Mount Type	Wall Hung
Style	Contemporary
Handle Type	Handleless
Construction Method	Cam & Wood Dowel
Construction Type	Rigid
Drawer Type	80mm High Metal Soft-close
Fascia Finish	Mfc Painted Matt
Fsc Certified	Yes
Handles Included	No
Material Thickness	18 mm
No. Drawers	2
Waste Shroud	Yes

© ROXOR Group

Sales Code: LBG1200 **Barcode:** 5056678449912 **Brand:** nuie **Description:** 1205 x 390mm Bellato Grey MFC Worktop



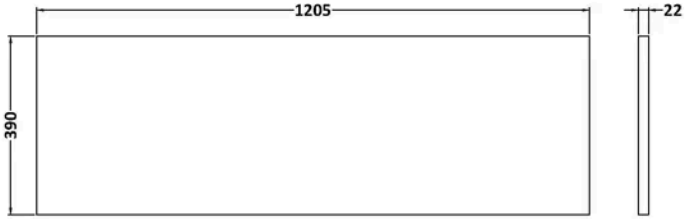

Product Dimensions

Product	22 x 1205 x 390mm (H x W x D)
Packaged	25 x 1215 x 455mm (H x W x D)
Nett Weight	5 kg
Packaged Weight	5 kg

Packaging Details

Box Qty	1

Product Details

Country of Origin	United Kingdom
Product Material	Mfc Laminated
Colour/Finish	Bellato Grey
Style	Contemporary

© ROXOR Group

Sales Code: URB193 **Barcode:** 5056211890454 **Brand:** Hudson Reed **Description:** Hudson Reed Urban 600mm White 2 Drawer Wall Hung Vanity Unit



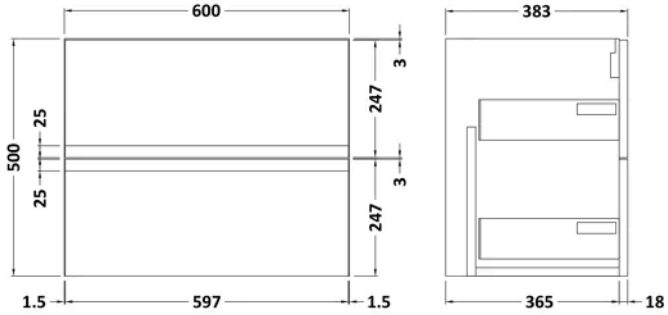

Product Dimensions

Product	500 x 610 x 383mm (H x W x D)
Packaged	500 x 595 x 383mm (H x W x D)
Nett Weight	18.5 kg
Packaged Weight	19 kg

Packaging Details

Box Qty	1

Product Details

Country of Origin	China
Product Material	Mfc Painted Gloss
Colour/Finish	Gloss White
Mount Type	Wall Hung
Style	Contemporary
Construction Method	Cam & Wood Dowel
Construction Type	Rigid
Fascia Finish	Mfc Painted Gloss
Handles Included	No
Material Thickness	18 mm
No. Drawers	2

© ROXOR Group