Sales Code: URB102W

Barcode: 5056211897323

Brand: Hudson Reed

Description: Hudson Reed Urban Satin White 500mm 2 Drawer Wall Hung Vanity Unit With Co-ordinating Worktop

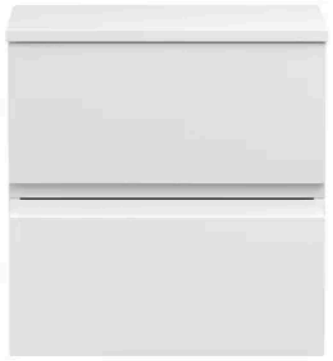

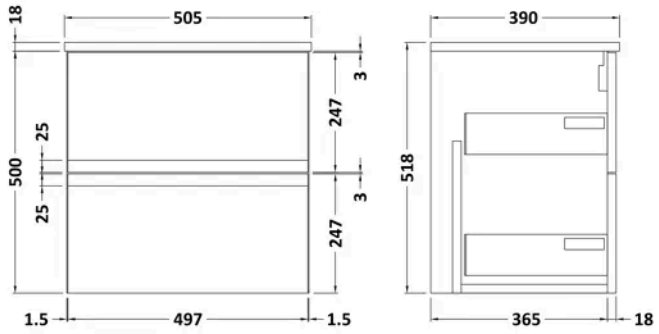

Product Dimensions

Product	518 x 505 x 390mm (H x W x D)
Packaged	550 x 550 x 550mm (H x W x D)
Nett Weight	20 kg
Packaged Weight	20.5 kg

Packaging Details

Box Qty	2

Product Details

Country of Origin	China
Product Material	Mfc Painted Matt
Colour/Finish	Satin White
Mount Type	Wall Hung
Style	Contemporary
Handle Type	Handleless
Construction Method	Cam & Wood Dowel
Construction Type	Rigid
Drawer Type	80mm High Metal Soft-close
Fascia Finish	Mdf Painted Matt
Fsc Certified	Yes
Handles Included	No
Material Thickness	18 mm
No. Drawers	2
Waste Shroud	Yes

© ROXOR Group

Sales Code: MWT150 **Barcode:** 5056211899709 **Brand:** nuie **Description:** 500mm MDF Matt Worktop

Product Image Not Available

Technical Drawing Not Available

Product Dimensions

Product	18 x 505 x 390mm (H x W x D)
Packaged	25 x 525 x 410mm (H x W x D)
Nett Weight	2 kg
Packaged Weight	2.5 kg

Packaging Details

Box Qty	1

Product Details

Country of Origin	China
Product Material	Mdf Painted Matt
Colour/Finish	Satin White
Style	Contemporary

© ROXOR Group

Sales Code: URB192 **Barcode:** 5056211890393 **Brand:** Hudson Reed **Description:** Hudson Reed Urban 500mm Gloss White 2 Drawer Wall Hung Vanity Unit



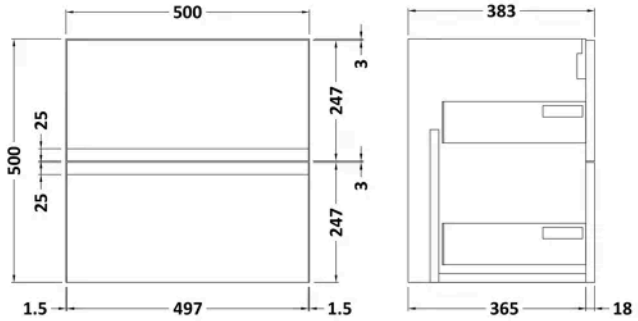

Product Dimensions

Product	500 x 510 x 383mm (H x W x D)
Packaged	500 x 495 x 383mm (H x W x D)
Nett Weight	18.5 kg
Packaged Weight	19 kg

Packaging Details

Box Qty	1

Product Details

Country of Origin	China
Product Material	Mfc Painted Gloss
Colour/Finish	Gloss White
Mount Type	Wall Hung
Style	Contemporary
Construction Method	Cam & Wood Dowel
Construction Type	Rigid
Fascia Finish	Mfc Painted Gloss
Handles Included	No
Material Thickness	18 mm
No. Drawers	2

© ROXOR Group