Sales Code: TTR-501CR **Barcode:** 5056474541988 **Brand:** Trisen **Description:** Trisen Chrome Tumbler Holder With Glass Tumbler



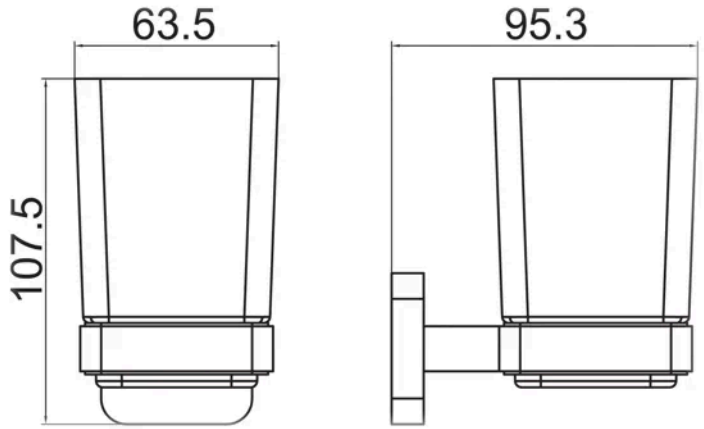

Product Dimensions

Product	108 x 64 x 95mm (H x W x D)
Packaged	93 x 136 x 138mm (H x W x D)
Nett Weight	0.5 kg
Packaged Weight	0.53 kg

Packaging Details

Box Qty	1

Product Details

Country of Origin	China
Product Material	Brass
Colour/Finish	Chrome
Style	Contemporary

© ROXOR Group