Sales Code: TSVT7104 **Barcode:** 5056883703922 **Brand:** Old London **Description:** Old London Topaz Brushed Pewter Exposed Dual Shower Valve



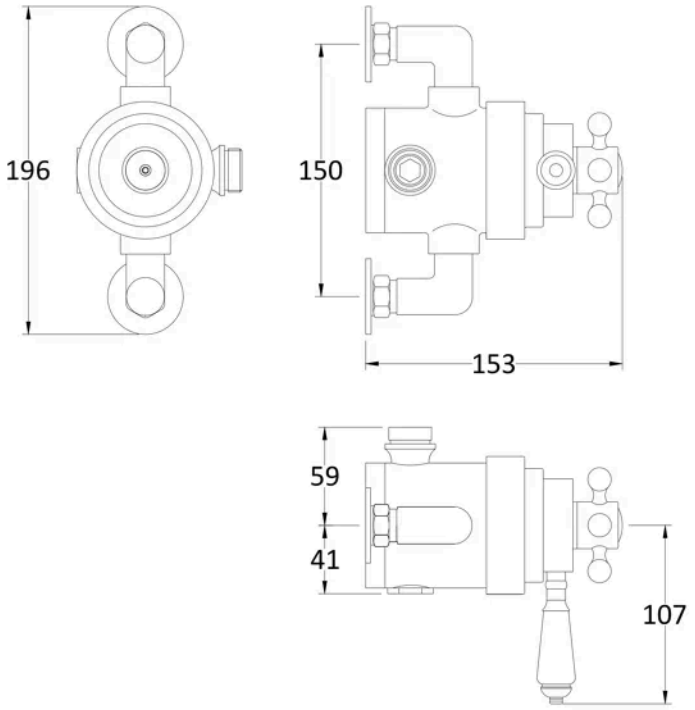

Product Dimensions

Product	166 x 196 x 153mm (H x W x D)
Packaged	185 x 240 x 240mm (H x W x D)
Nett Weight	3.2 kg
Packaged Weight	3.44 kg

Packaging Details

Label Size (mm)	50 x 100
Label Colour	White
Label Qty	3.0000

Product Details

Country of Origin	United Kingdom
Product Material	Brass
Control Type	Manual
WRAS Approved	No
Valve/Cartridge Type	1/4 Turn
Colour/Finish	Brushed Pewter
Mount Type	Wall Hung
Style	Traditional
Handle Type	Lever
TMV2 Approved	No
TMV3 Approved	No
Pipe Centres	150
Handset Included	No
Head Included	No
Min Operating Pressure	0.1 Bar
No. Outlets	1.0000
Outlet Elbow Supplied	No
Valve / Cartridge Type	1/4 Turn

© ROXOR Group