Sales Code: TSVT103 **Barcode:** 5055275831632 **Brand:** Old London **Description:** Old London Topaz Chrome Triple Thermostatic Shower Valve Rigid Riser Kit



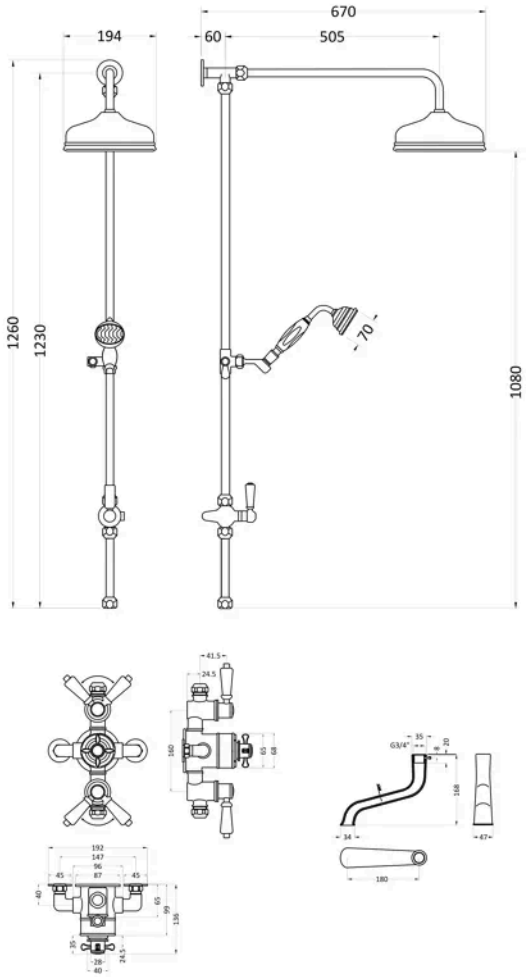

Product Dimensions

Product	1260 x 195 x 667mm (H x W x D)
Packaged	175 x 260 x 1100mm (H x W x D)
Nett Weight	15 kg
Packaged Weight	15 kg

Packaging Details

Label Size (mm)	50 x 100
Label Colour	White
Label Qty	1.0000

Product Details

Country of Origin	United Kingdom
Product Material	Brass
Control Type	Manual
WRAS Approved	No
Valve/Cartridge Type	1/4 Turn
Colour/Finish	Chrome
Mount Type	Wall Hung
Style	Traditional
Handle Type	Crosshead/Lever
TMV2 Approved	No
TMV3 Approved	No
Pipe Centres	150
Handset Included	Yes
Head Included	Yes
Min Operating Pressure	0.5 Bar
No. Outlets	2.0000
Valve / Cartridge Type	1/4 Turn

© ROXOR Group