Sales Code: TSVT005 **Barcode:** 5055275831625 **Brand:** Old London **Description:** Old London Topaz Chrome Concealed Triple Shower Valve With Diverter

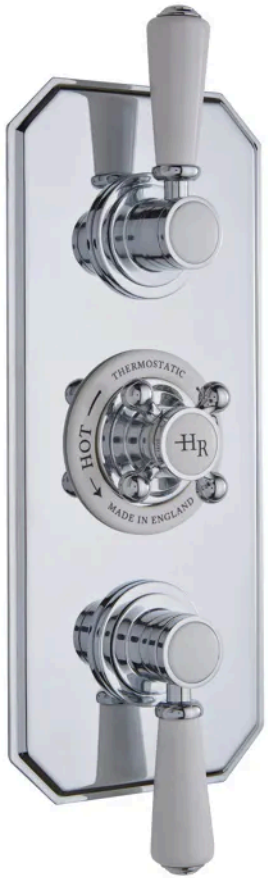

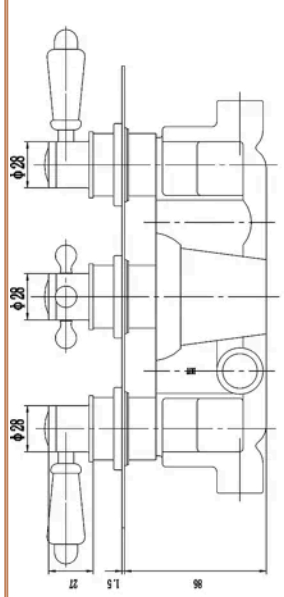

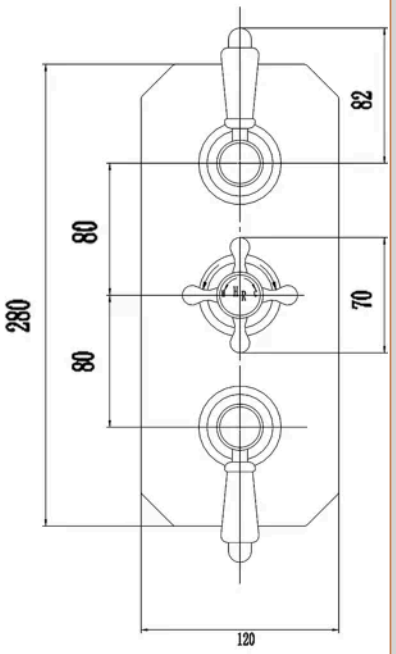

Product Dimensions

Product	320 x 120 x 135mm (H x W x D)
Packaged	110 x 250 x 320mm (H x W x D)
Nett Weight	3.3 kg
Packaged Weight	3.5 kg

Packaging Details

Label Size (mm)	50 x 100
Label Colour	White
Label Qty	1.0000

Product Details

Country of Origin	United Kingdom
Product Material	Brass Abs
Control Type	Manual
WRAS Approved	Yes
Valve/Cartridge Type	1/4 Turn
Colour/Finish	Chrome
Mount Type	Wall Hung
Style	Traditional
Handle Type	Crosshead/Lever
TMV2 Approved	Yes
TMV3 Approved	No
Handset Included	No
Head Included	No
Min Operating Pressure	0.1 Bar
No. Outlets	3.0000
Tmv2 Approval Number	2603035
Valve / Cartridge Type	1/4 Turn
Wras Approval No	250602040

© ROXOR Group