Sales Code: TJ-LAGUNAS **Barcode:** 5056474510656 **Brand:** Synergy **Description:** Synergy Symetria 1200mm Curved Bath



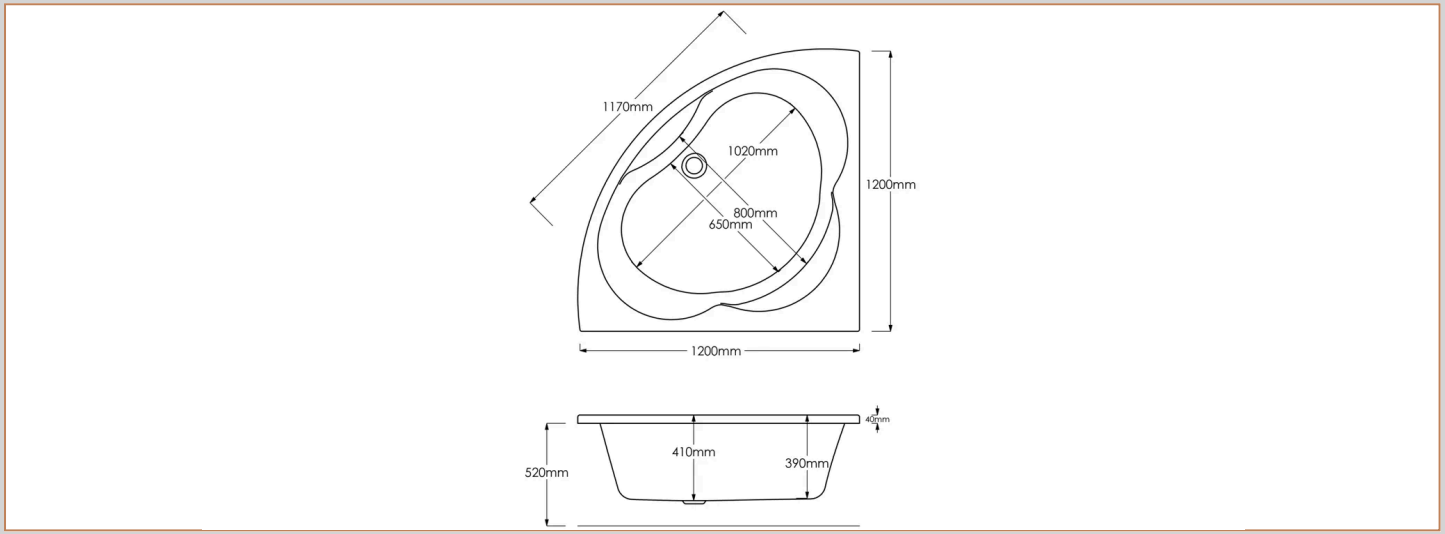

Product Dimensions

Product	520 x 410 x 1200mm (H x W x L)
Packaged	410 x 1200 x 1200mm (H x W x D)
Nett Weight	25 kg
Packaged Weight	25 kg

Product Details

Volume	218 Litre
Country of Origin	United Kingdom
Product Material	Acrylic
Colour/Finish	White
Style	Contemporary
Bath Panel Included	No
Displaced Capacity	148 Litre
Hydrotherapy System	No
Includes Grips	No
No. Of Tapholes	No Tapholes
Overflow Included	No
Tap Included	No
Waste Included	No

© ROXOR Group