Sales Code: TJ-LAGUNAPS **Barcode:** 5056474510687 **Brand:** Synergy **Description:** Synergy Symetria 1200mm Acrylic Corner Bath Panel

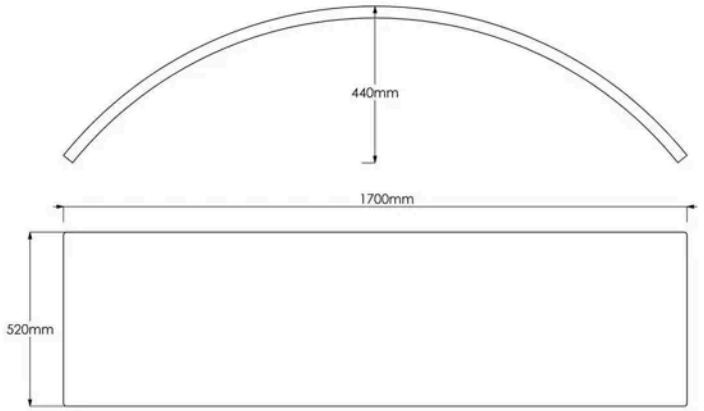

Product Dimensions

Product	520 x 440 x 20 x 1700mm (H x W x D x L)
Packaged	520 x 530 x 1200mm (H x W x D)
Nett Weight	5 kg
Packaged Weight	5 kg

Product Details

Country of Origin	United Kingdom
Product Material	Acrylic
Colour/Finish	White
Style	Contemporary

© ROXOR Group