Sales Code: TIW415 **Barcode:** 5056462673677 **Brand:** nuie **Description:** nuie Revolution Matt Black Mono Basin Mixer With Push Button Waste



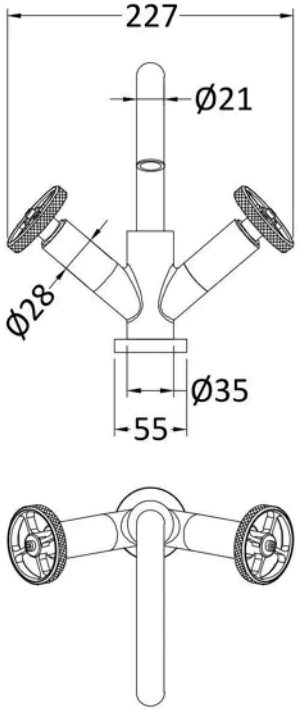

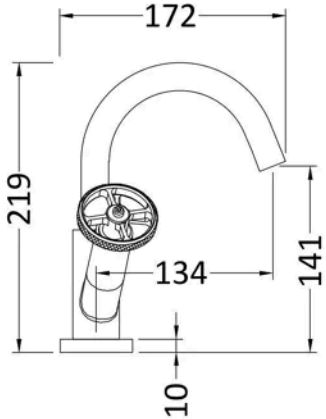

Product Dimensions

Product	217 x 230 x 175mm (H x W x D)
Packaged	90 x 175 x 270mm (H x W x D)
Outer Box	410 x 557 x 295mm (H x W x D)
Nett Weight	2.5 kg
Packaged Weight	2.6 kg

Packaging Details

Box Qty	1
Label Size (mm)	50 x 100
Label Colour	White
Label Qty	2.0000

Product Details

Country of Origin	United Kingdom
Product Material	Brass
Control Type	Manual
Waste Type	Push Button
WRAS Approved	Yes
Valve/Cartridge Type	1/4 Turn Ceramic Disc
Colour/Finish	Matt Black
Mount Type	Deck
Style	Contemporary
Handle Type	Crosshead
TMV2 Approved	No
TMV3 Approved	No
Min Operating Pressure	0.1 Bar
Tap Tails Included	Yes
Valve / Cartridge Type	1/4 Turn Ceramic Disc
Waste Included	Yes
Wras Approval No	2204064

© ROXOR Group