Sales Code: TEX334S

Barcode: 5055275866825

Brand: nuie

Description: nuie Tec Crosshead Chrome 4 Tap Hole Bath Mixer Tap Including Shower Kit and Hose Retainer



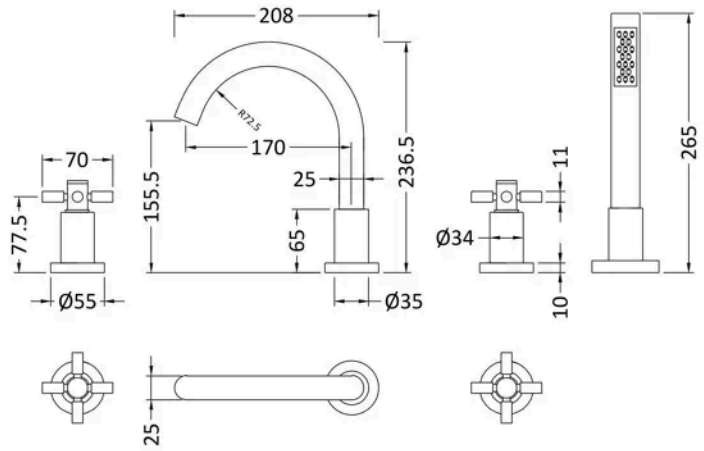

Product Dimensions

Product	236 x 345 x 207mm (H x W x D)
Packaged	550 x 550 x 550mm (H x W x D)
Nett Weight	5.98 kg
Packaged Weight	5.98 kg

Product Details

Country of Origin	China
Product Material	Brass
Control Type	Manual
Colour/Finish	Chrome
Mount Type	Deck
Style	Contemporary
Handle Type	Crosshead
Min Operating Pressure	1 Bar
Waste Included	No

© ROXOR Group

Sales Code: SPR04 **Barcode:** 5055146129554 **Brand:** nuie **Description:** nuie Chrome 4 Tap Hole Hose Retainer



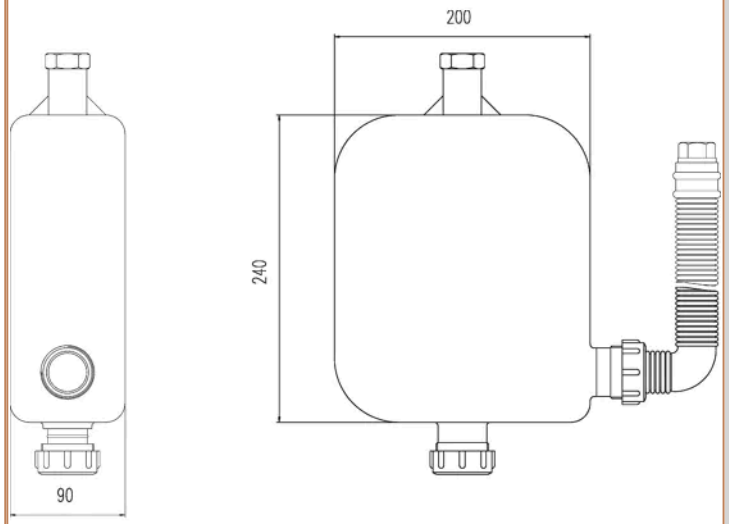

Product Dimensions

Product	300 x 90 x 340mm (H x W x D)
Packaged	150 x 250 x 330mm (H x W x D)
Nett Weight	0.96 kg
Packaged Weight	0.96 kg

Packaging Details

Box Qty	1

Product Details

Country of Origin	China
Product Material	Brass
Colour/Finish	Chrome
Style	Contemporary

© ROXOR Group

Sales Code: TEX334 **Barcode:** 5055146192039 **Brand:** nuie **Description:** Tec Crosshead Tec Crosshead 4 Tap Hole Bath Mixer

Product Image Not Available

Technical Drawing Not Available

Product Dimensions

Product	236 x 345 x 207mm (H x W x D)
Packaged	140 x 240 x 270mm (H x W x D)
Nett Weight	5.02 kg
Packaged Weight	5.02 kg

Packaging Details

Label Size (mm)	50 x 100
Label Colour	White
Label Qty	2.0000

Product Details

Country of Origin	United Kingdom
Product Material	Brass
Control Type	Manual
WRAS Approved	No
Valve/Cartridge Type	1/4 Turn Ceramic Disc
Colour/Finish	Chrome
Mount Type	Deck
Style	Contemporary
Handle Type	Crosshead
TMV2 Approved	No
TMV3 Approved	No
Pipe Size	22 mm (3/4" BSP)
Handset Included	Yes
Hose Included	Yes
Hose Length	1500 mm
Min Operating Pressure	1 Bar
Tap Spout Height	135 mm
Tap Spout Projection	183 mm
Valve / Cartridge Type	1/4 Turn Ceramic Disc
Waste Included	No

© ROXOR Group