Sales Code: TEL354 **Barcode:** 5055146198086 **Brand:** nuie **Description:** nuie Tec Lever Chrome Bath Shower Mixer



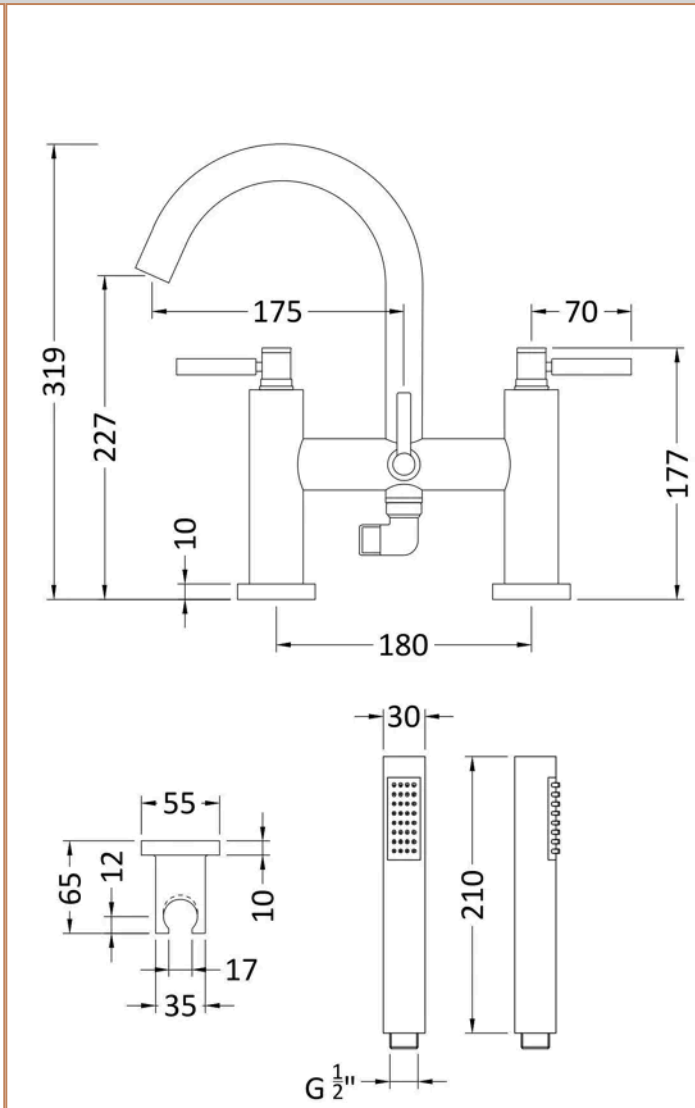

Product Dimensions

Product	320 x 230 x 220mm (H x W x D)
Packaged	140 x 235 x 265mm (H x W x D)
Outer Box	320 x 490 x 290mm (H x W x D)
Nett Weight	4.33 kg
Packaged Weight	4.33 kg

Packaging Details

Label Size (mm)	50 x 100
Label Colour	White
Label Qty	2.0000

Product Details

Country of Origin	United Kingdom
Product Material	Brass
Control Type	Manual
WRAS Approved	No
Valve/Cartridge Type	1/4 Turn Ceramic Disc
Colour/Finish	Chrome
Mount Type	Deck
Style	Contemporary
Handle Type	Lever
TMV2 Approved	No
TMV3 Approved	No
Pipe Size	22 mm (3/4" BSP)
Pipe Centres	180
Handset Included	Yes
Hose Included	Yes
Hose Length	1500 mm
Min Operating Pressure	0.2 Bar
Tap Spout Height	200 mm
Tap Spout Projection	115 mm
Valve / Cartridge Type	1/4 Turn Ceramic Disc
Waste Included	No

© ROXOR Group