Sales Code: TEL337 **Barcode:** 5055146192060 **Brand:** nuie **Description:** nuie Tec Lever Chrome Basin Mixer With Pop Up Waste



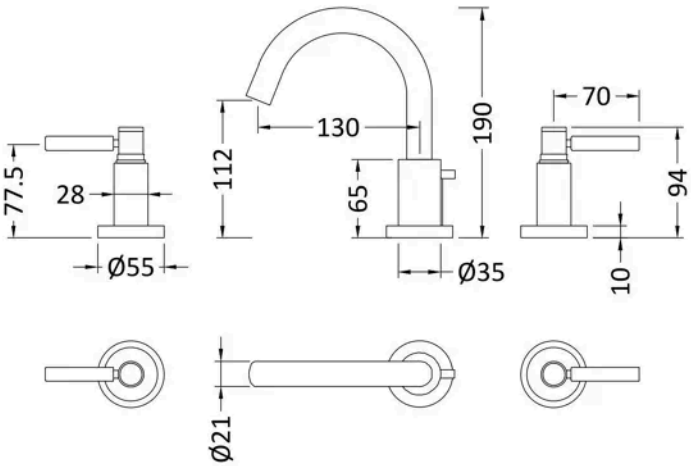

Product Dimensions

Product	190 x 235 x 170mm (H x W x D)
Packaged	850 x 175 x 390mm (H x W x D)
Outer Box	350 x 400 x 370mm (H x W x D)
Nett Weight	3.23 kg
Packaged Weight	3.23 kg

Packaging Details

Label Size (mm)	50 x 100
Label Colour	White
Label Qty	2.0000

Product Details

Country of Origin	United Kingdom
Product Material	Brass
Control Type	Manual
Waste Type	Pop-Up
WRAS Approved	No
Valve/Cartridge Type	1/4 Turn Ceramic Disc
Colour/Finish	Chrome
Mount Type	Deck
Style	Contemporary
Handle Type	Lever
TMV2 Approved	No
TMV3 Approved	No
Min Operating Pressure	0.1 Bar
Tap Spout Height	110 mm
Tap Spout Projection	25 mm
Valve / Cartridge Type	1/4 Turn Ceramic Disc
Waste Included	Yes

© ROXOR Group