Sales Code: TEL334S **Barcode:** 5055275888766 **Brand:** nuie **Description:** nuie Tec Lever Chrome 4 Tap Hole Bath Shower Mixer Tap With Shower Kit



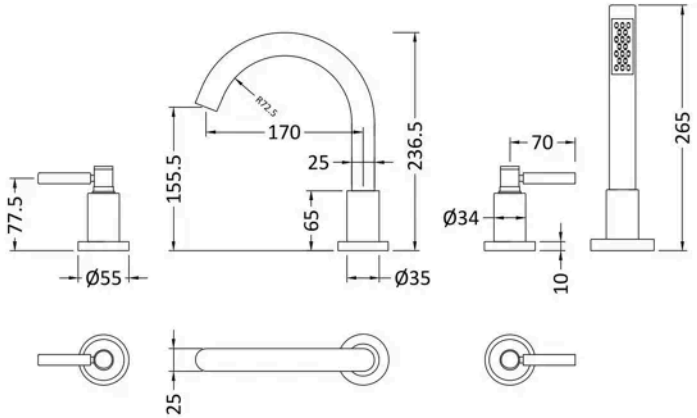

Product Dimensions

Product	237 x 325 x 207mm (H x W x D)
Packaged	550 x 550 x 550mm (H x W x D)
Nett Weight	5.91 kg
Packaged Weight	5.91 kg

Product Details

Country of Origin	China
Product Material	Brass
Control Type	Manual
Colour/Finish	Chrome
Mount Type	Deck
Style	Contemporary
Handle Type	Lever
Min Operating Pressure	1 Bar
Waste Included	No

© ROXOR Group

Sales Code: SPR04 **Barcode:** 5055146129554 **Brand:** nuie **Description:** nuie Chrome 4 Tap Hole Hose Retainer



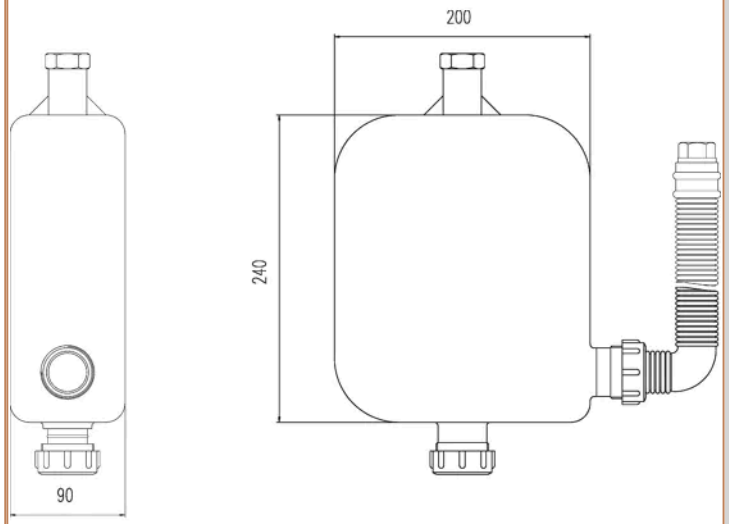

Product Dimensions

Product	300 x 90 x 340mm (H x W x D)
Packaged	150 x 250 x 330mm (H x W x D)
Nett Weight	0.96 kg
Packaged Weight	0.96 kg

Packaging Details

Box Qty	1

Product Details

Country of Origin	China
Product Material	Brass
Colour/Finish	Chrome
Style	Contemporary

© ROXOR Group

Sales Code: TEL334 **Barcode:** 5055146192084 **Brand:** nuie **Description:** Tec Lever Tec Lever 4 Tap Hole Bath Mixer

Product Image Not Available

Technical Drawing Not Available

Product Dimensions

Product	237 x 325 x 207mm (H x W x D)
Packaged	140 x 240 x 270mm (H x W x D)
Nett Weight	4.95 kg
Packaged Weight	4.95 kg

Packaging Details

Label Size (mm)	50 x 100
Label Colour	White
Label Qty	2.0000

Product Details

Country of Origin	United Kingdom
Product Material	Brass
Control Type	Manual
WRAS Approved	No
Valve/Cartridge Type	1/4 Turn Ceramic Disc
Colour/Finish	Chrome
Mount Type	Deck
Style	Contemporary
Handle Type	Lever
TMV2 Approved	No
TMV3 Approved	No
Pipe Size	22 mm (3/4" BSP)
Handset Included	Yes
Hose Included	Yes
Hose Length	1500 mm
Min Operating Pressure	1 Bar
Tap Spout Height	140 mm
Tap Spout Projection	180 mm
Tap Tails Included	Yes
Valve / Cartridge Type	1/4 Turn Ceramic Disc
Waste Included	No

© ROXOR Group