Sales Code: TEL315 **Barcode:** 5055146167945 **Brand:** nuie **Description:** nuie Tec Lever Chrome Mono Basin Mixer With Waste



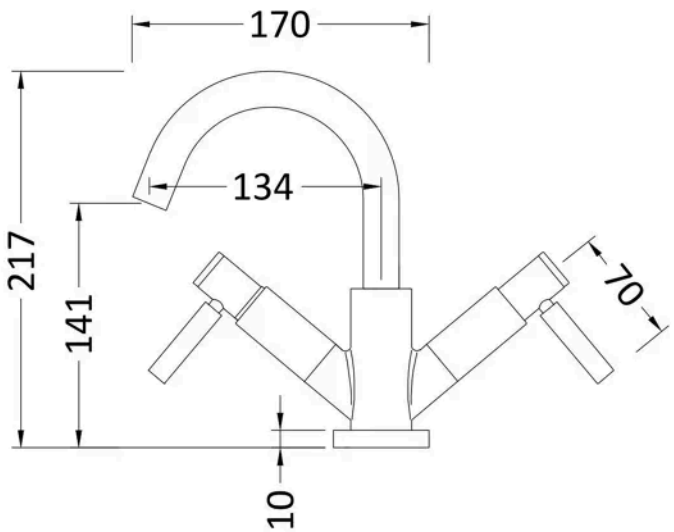

Product Dimensions

Product	217 x 260 x 175mm (H x W x D)
Packaged	90 x 175 x 270mm (H x W x D)
Outer Box	410 x 557 x 295mm (H x W x D)
Nett Weight	2.42 kg
Packaged Weight	2.42 kg

Packaging Details

Label Size (mm)	50 x 100
Label Colour	White
Label Qty	2.0000

Product Details

Country of Origin	United Kingdom
Product Material	Brass
Control Type	Manual
Waste Type	Push Button
WRAS Approved	Yes
Valve/Cartridge Type	1/4 Turn Ceramic Disc
Colour/Finish	Chrome
Mount Type	Deck
Style	Contemporary
Handle Type	Lever
TMV2 Approved	No
TMV3 Approved	No
Hose Included	No
Min Operating Pressure	0.1 Bar
Tap Spout Height	142 mm
Tap Spout Projection	127 mm
Tap Tails Included	Yes
Valve / Cartridge Type	1/4 Turn Ceramic Disc
Waste Included	Yes
Wras Approval No	2204064

© ROXOR Group