Sales Code: SY-ZB16LS **Barcode:** 5056474507045 **Brand:** Synergy **Description:** Synergy Zeya 1600mm Left Hand P Shape Bath



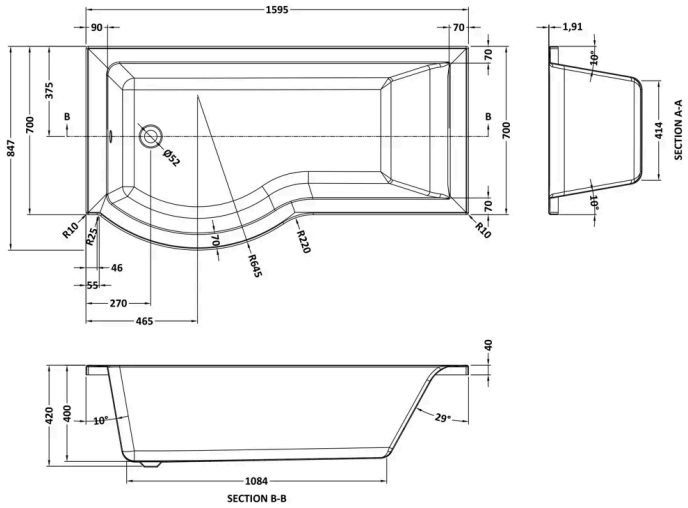

Product Dimensions

Product	415 x 850 x 1600mm (H x W x L)
Packaged	425 x 850 x 1600mm (H x W x D)
Nett Weight	17.5 kg
Packaged Weight	17.5 kg

Packaging Details

Box Qty	1
Label Size (mm)	35 x 300
Label Colour	White
Label Qty	2.0000

Product Details

Volume	200 Litre
Country of Origin	Egypt
Product Material	Acrylic
Colour/Finish	White
Style	Contemporary
Fixings Included	No
Bath Panel Included	No
Ce Certified	Yes
Displaced Capacity	130 Litre
Includes Grips	No
Leg Set Included	No
No. Of Tapholes	No Tapholes
Overflow Included	No
Tap Included	No
Waste Included	No

© ROXOR Group