Sales Code: SY-VODFF14BP

Barcode: 5056883723234

Brand: Synergy

Description: Synergy Vodas 8 1400mm Matt Black Full Outer Frame Wetroom Screen With Support Bar

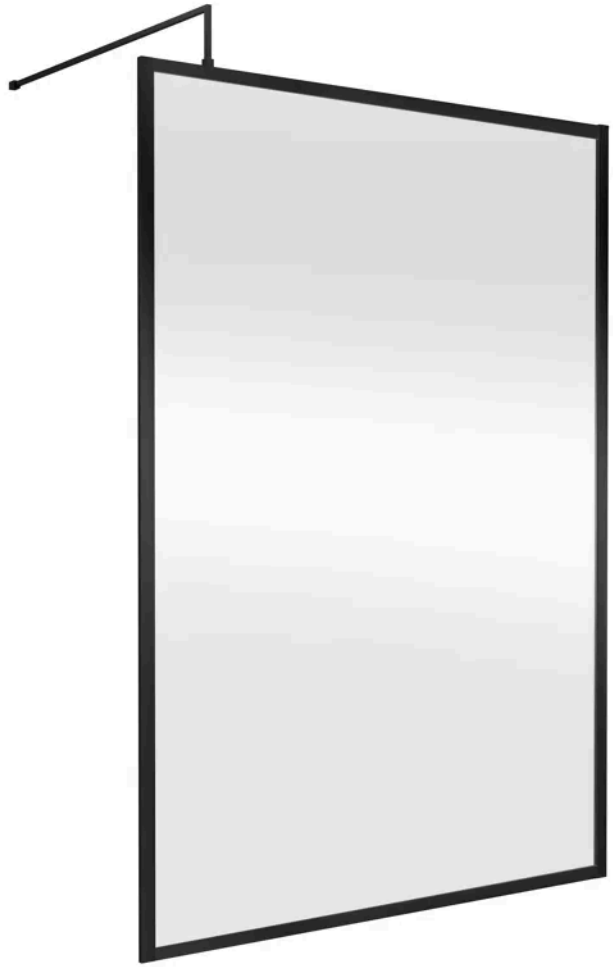

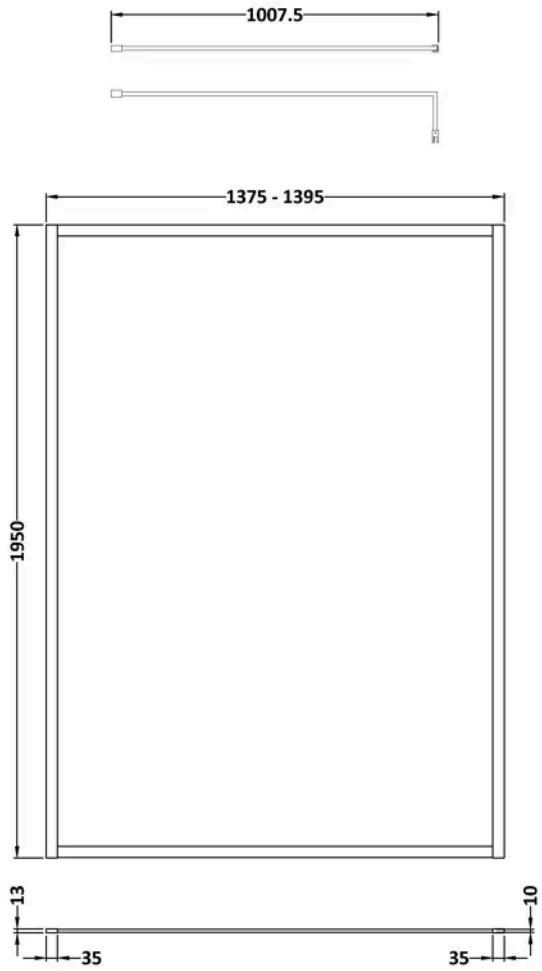

Product Dimensions

Product	1950 x 1398 x 14mm (H x W x D)
Packaged	2070 x 1450 x 60mm (H x W x D)
Nett Weight	69.08 kg
Packaged Weight	69.08 kg

Product Details

Country of Origin	China
Product Material	Aluminium
Colour/Finish	Matt Black
Style	Contemporary
Easy Clean	Yes
Adjustment Max	1400
Adjustment Min	1380
Ce Certified	Yes
Easy Fit	No
Enclosure Design	Framed
Frame Finish	Matt Black
Glass Thickness	8 mm
Handles Included	No

© ROXOR Group

Sales Code: ALIX024 **Barcode:** 5056474597978 **Brand:** Arley Pro **Description:** Synergy Matt Black Wetroom Support Bar Kit

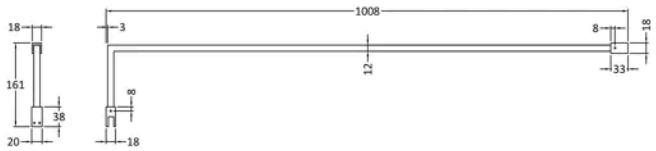

Product Dimensions

Product	15 x 150 x 1000mm (H x W x D)
Packaged	35 x 160 x 1020mm (H x W x D)
Nett Weight	0.67 kg
Packaged Weight	0.7 kg

Product Details

Country of Origin	China
Product Material	Stainless Steel
Colour/Finish	Matt Black
Style	Contemporary

© ROXOR Group

Sales Code: SY-VODB1400G **Barcode:** 5056817761042 **Brand:** Synergy **Description:** Synergy Glass Only 1400 x 1950 x 8mm

Product Image Not Available

Technical Drawing Not Available

Product Dimensions

Product	1950 x 1400 x 8mm (H x W x D)
Packaged	2070 x 1450 x 60mm (H x W x D)
Nett Weight	62.7 kg
Packaged Weight	62.7 kg

Product Details

Country of Origin	China
Easy Clean	No
Ce Certified	Yes
Easy Fit	No
Enclosure Design	Frameless
Glass Thickness	8 mm

© ROXOR Group

Sales Code: SY-VODF004 **Barcode:** 5056474598661 **Brand:** Synergy **Description:** Synergy Vodas 1950mm Matt Black Wetroom Wall Channel

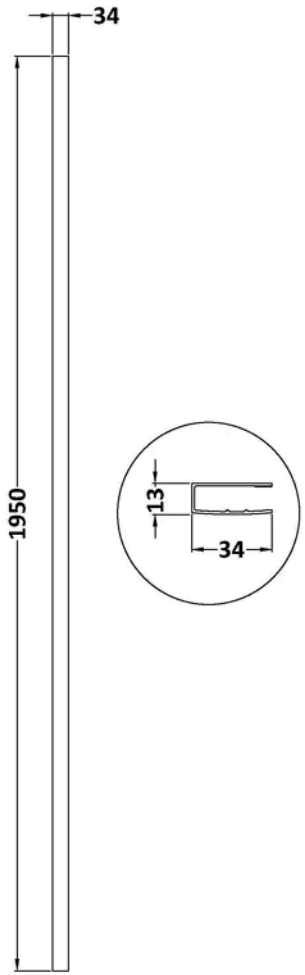

Product Dimensions

Product	1950 x 34 x 13mm (H x W x D)
Packaged	400 x 50 x 1970mm (H x W x D)
Nett Weight	1.01 kg
Packaged Weight	1.42 kg

Product Details

Country of Origin	China
Product Material	Aluminium
Colour/Finish	Matt Black
Style	Contemporary

© ROXOR Group

Sales Code: SY-VODF004UF **Barcode:** 5056883722336 **Brand:** Synergy **Description:** Synergy Vodas 1950mm Matt Black Undrilled Flat Wetroom Screen Profile

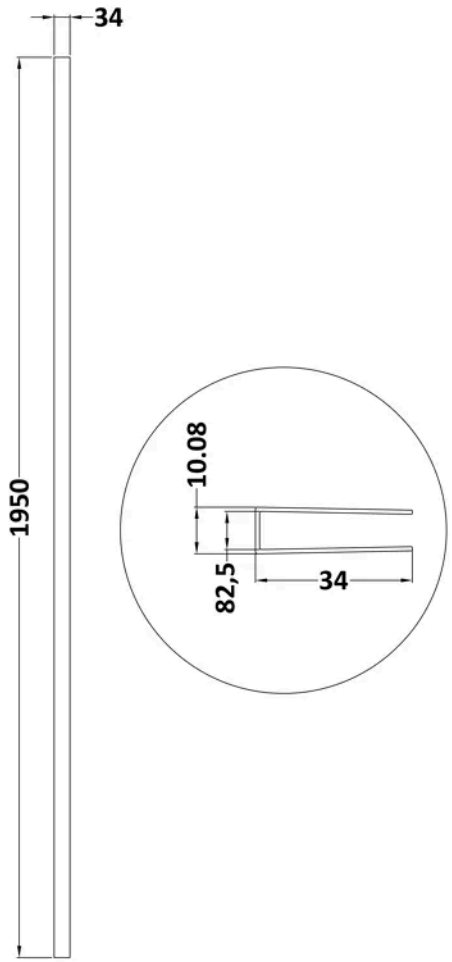

Product Dimensions

Product	45 x 185 x 1970mm (H x W x D)
Packaged	400 x 50 x 1970mm (H x W x D)
Nett Weight	1.01 kg
Packaged Weight	1.42 kg

Product Details

Country of Origin	China
Product Material	Aluminium
Colour/Finish	Matt Black
Style	Contemporary

© ROXOR Group