Sales Code: SY-VOD70-B **Barcode:** 5056474531958 **Brand:** Synergy **Description:** Synergy Vodas 8 Stella 800mm Chrome Quadrant Shower Enclosure



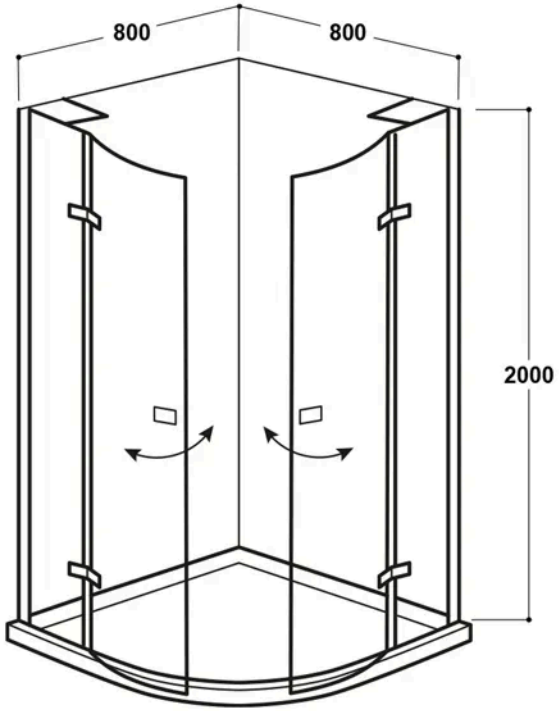

Product Dimensions

Product	2000 x 800 x 800 x 800mm (H x W x D x L)
Packaged	2065 x 95 x 675mm (H x W x D)
Nett Weight	51 kg
Packaged Weight	51 kg

Product Details

Country of Origin	China
Product Material	Glass
Colour/Finish	Chrome
Style	Contemporary
Handle Type	Knob
Easy Clean	Yes
Adjustment Max	790
Adjustment Min	770
Ce Certified	Yes
Easy Fit	Yes
Enclosure Design	Frameless
Entry Width	710 mm
Frame Finish	Chrome
Glass Thickness	8 mm
No. Doors	2

© ROXOR Group