Sales Code: SY-VG02BZ **Barcode:** 5056474588792 **Brand:** Synergy **Description:** Synergy Vega Brushed Bronze High Rise Mono Basin Mixer



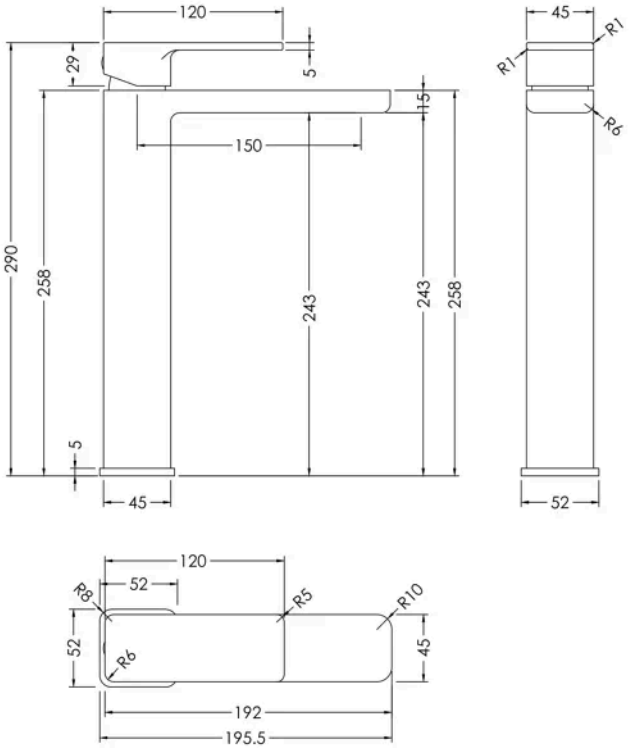

Product Dimensions

Product	290 x 52 x 196mm (H x W x D)
Packaged	95 x 270 x 330mm (H x W x D)
Outer Box	500 x 345mm (W x D)
Nett Weight	2.5 kg
Packaged Weight	2.7 kg

Packaging Details

Box Qty	1
Label Size (mm)	50 x 100
Label Colour	White
Label Qty	1.0000

Product Details

Country of Origin	China
Product Material	Brass
Control Type	Manual
WRAS Approved	No
Valve/Cartridge Type	Single Lever Cartridge
Colour/Finish	Brushed Bronze
Mount Type	Deck
Style	Contemporary
Handle Type	Lever/Square
Fixings Included	Yes
TMV2 Approved	No
TMV3 Approved	No
Pipe Size	1/2"
Handset Included	No
Hose Included	No
Min Operating Pressure	0.2 Bar
Tap Spout Height	243 mm
Tap Spout Projection	150 mm
Tap Tails Included	Yes
Valve / Cartridge Type	Single Lever Cartridge
Waste Included	No

© ROXOR Group