Sales Code: SY-SHE39DA **Barcode:** 5056474590894 **Brand:** Synergy **Description:** Synergy Shelley 992 x 600mm Anthracite Horizontal Double Panel Radiator



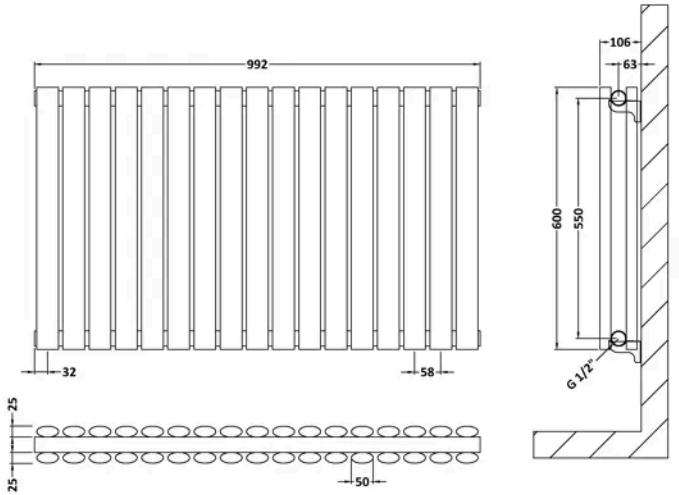

Product Dimensions

Product	600 x 992 x 106mm (H x W x D)
Packaged	105 x 665 x 1055mm (H x W x D)
Nett Weight	32 kg
Packaged Weight	34.8 kg

Packaging Details

Box Qty	1
Label Size (mm)	50 x 100
Label Colour	White
Label Qty	2.0000

Product Details

Country of Origin	China
Product Material	Steel
Colour/Finish	Anthracite
Mount Type	Wall Hung
Style	Contemporary
Pipe Centres	1082
Brackets Included	Yes
Btu Output 30	1944
Btu Output 50	3755
Ce Certified	Yes
Declaration Of Performance	Yes
Fuel Type	Water
Maximum Projection	110 mm
Number Of Heat Settings	1.0000
Rohs Certification	No
Thermal Output 30	570.0000 Watts
Thermal Output 50	1100.0000 Watts
Ukca Certified	Yes
Wall To Centre Tappings	51 mm
Weee Certification	No

© ROXOR Group