Sales Code: SY-SAS007W **Barcode:** 5056474591037 **Brand:** Synergy **Description:** Synergy Sassoon Anthracite 1223mm x 635mm Horizontal Designer Radiator



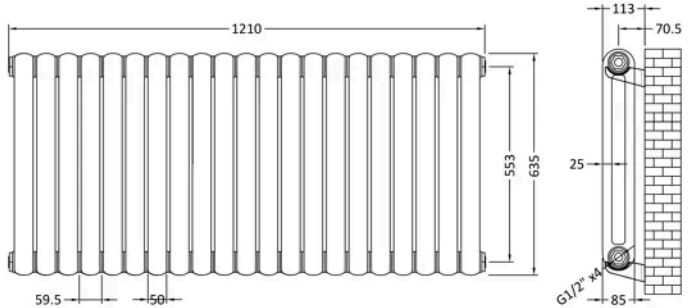

Product Dimensions

Product	635 x 1223 x 80mm (H x W x D)
Packaged	110 x 695 x 1335mm (H x W x D)
Nett Weight	38 kg
Packaged Weight	40 kg

Packaging Details

Box Qty	1
Label Size (mm)	50 x 100
Label Colour	White
Label Qty	2.0000

Product Details

Country of Origin	China
Product Material	Steel
Colour/Finish	Anthracite
Mount Type	Wall Hung
Style	Contemporary
Pipe Centres	473
Brackets Included	Yes
Btu Output 30	2338
Btu Output 50	4467
Ce Certified	Yes
Declaration Of Performance	Yes
Fuel Type	Water
Maximum Projection	130 mm
Number Of Heat Settings	1.0000
Rohs Certification	No
Thermal Output 30	685.0000 Watts
Thermal Output 50	1309.0000 Watts
Ukca Certified	No
Wall To Centre Tappings	80 mm
Weee Certification	No

© ROXOR Group