Sales Code: SY-RVAL325 **Barcode:** 5056474591389 **Brand:** Synergy **Description:** Synergy Chrome Straight Radiator Valve Pack (Pairs)



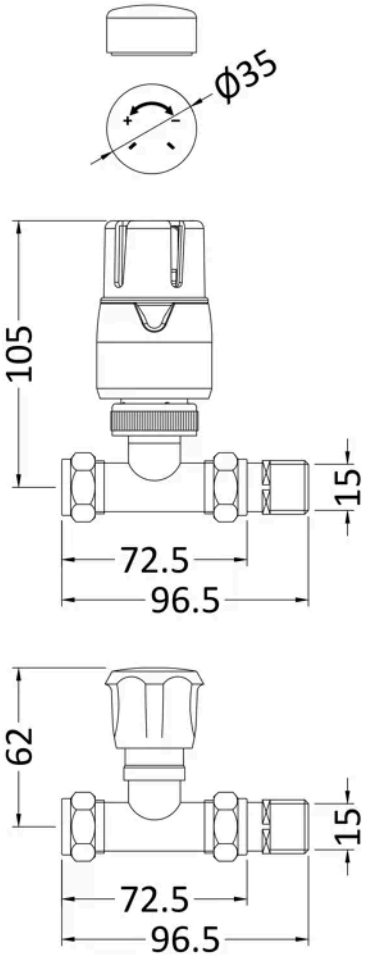

Product Dimensions

Product	97 x 110 x 50mm (H x W x D)
Packaged	50 x 95 x 140mm (H x W x D)
Nett Weight	0.2 kg
Packaged Weight	0.5 kg

Packaging Details

Box Qty	1

Product Details

Country of Origin	China
Product Material	Brass
Colour/Finish	Chrome
Style	Contemporary

© ROXOR Group