Sales Code: SY-RVAL324 **Barcode:** 5056474591327 **Brand:** Synergy **Description:** Synergy Chrome Angled Square Radiator Valve Pack (Pairs)



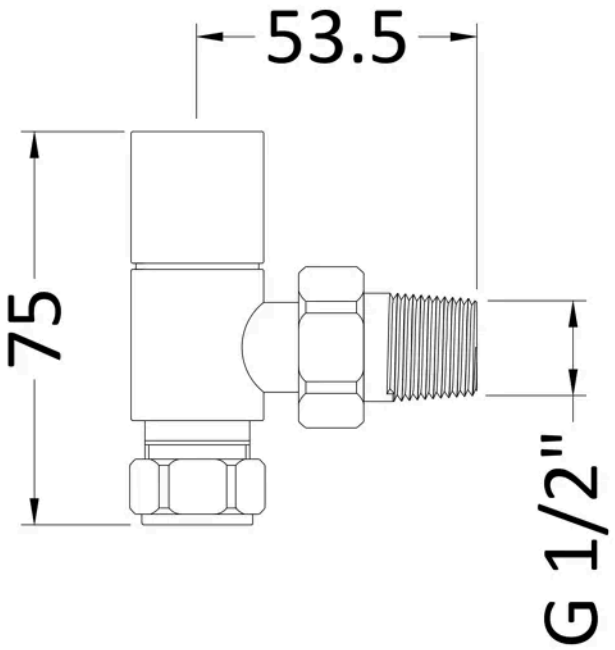

Product Dimensions

Product	75 x 25 x 65mm (H x W x D)
Packaged	85 x 75 x 75mm (H x W x D)
Nett Weight	0.61 kg
Packaged Weight	0.61 kg

Packaging Details

Box Qty	1

Product Details

Country of Origin	United Kingdom
Product Material	Steel
Colour/Finish	Chrome
Style	Contemporary

© ROXOR Group