Sales Code: SY-RVAL203 **Barcode:** 5056474591501 **Brand:** Synergy **Description:** Synergy Aldeborough Satin Nickel Angled Thermostatic Radiator Valve



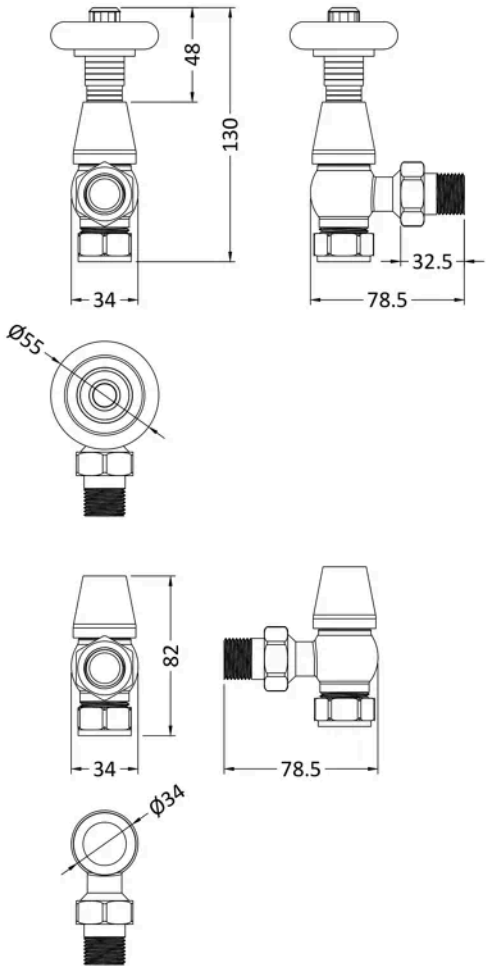

Product Dimensions

Product	131 x 55 x 97mm (H x W x D)
Packaged	185 x 145 x 85mm (H x W x D)
Nett Weight	0.83 kg
Packaged Weight	0.83 kg

Packaging Details

Box Qty	1

Product Details

Country of Origin	United Kingdom
Product Material	Brass
Colour/Finish	Satin Nickel
Style	Traditional

© ROXOR Group