Sales Code: SY-PSN13611-N **Barcode:** 5056474506840 **Brand:** Synergy **Description:** Synergy Berg Duo 1800mm Double Ended Bath

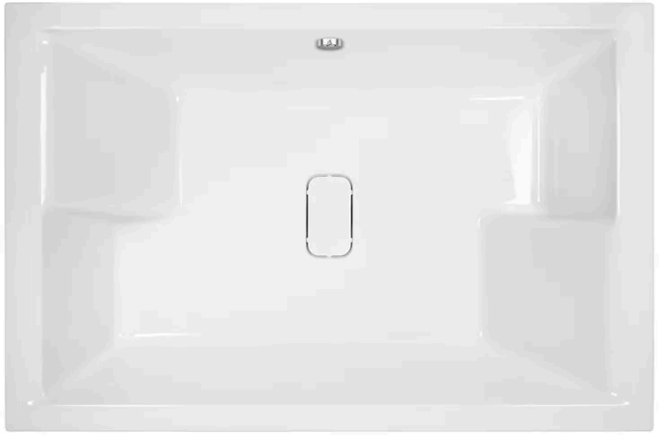

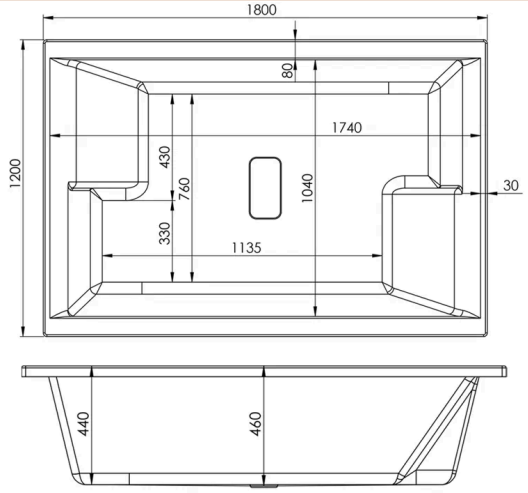

Product Dimensions

Product	590 x 1200 x 1800mm (H x W x L)
Packaged	460 x 200 x 1800mm (H x W x D)
Nett Weight	0.05 kg
Packaged Weight	0.05 kg

Product Details

Volume	440 Litre
Country of Origin	United Kingdom
Product Material	Acrylic
Colour/Finish	White
Style	Contemporary
Bath Panel Included	No
Ce Certified	Yes
Displaced Capacity	370 Litre
Hydrotherapy System	No
Includes Grips	No
No. Of Tapholes	No Tapholes
Overflow Included	No
Tap Included	No
Waste Included	No

© ROXOR Group