Sales Code: SY-OVFL02BZ **Barcode:** 5056883738733 **Brand:** Synergy **Description:** Synergy Brushed Bronze Oval Basin Overflow Cover



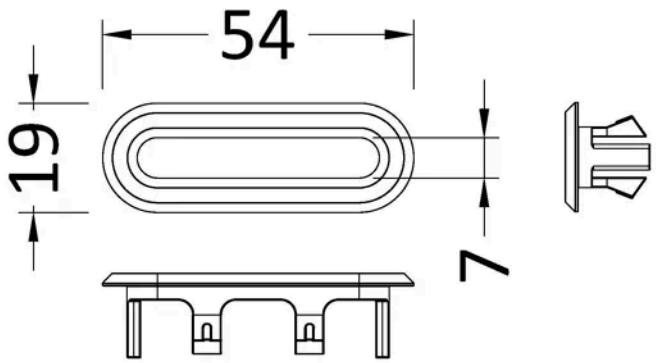

Product Dimensions

Product	19 x 54 x 10mm (H x W x D)
Packaged	30 x 30 x 30mm (H x W x D)
Nett Weight	0.2 kg
Packaged Weight	0.2 kg

Packaging Details

Box Qty	1

Product Details

Country of Origin	China
Product Material	Abs
Colour/Finish	Brushed Bronze
Style	Contemporary

© ROXOR Group