Sales Code: SY-OM11RCM-GW

Barcode: 5056883759349

Brand: Synergy

Description: Synergy Omerg Gloss White 1100mm Carrera Marble Combination Unit Right Hand



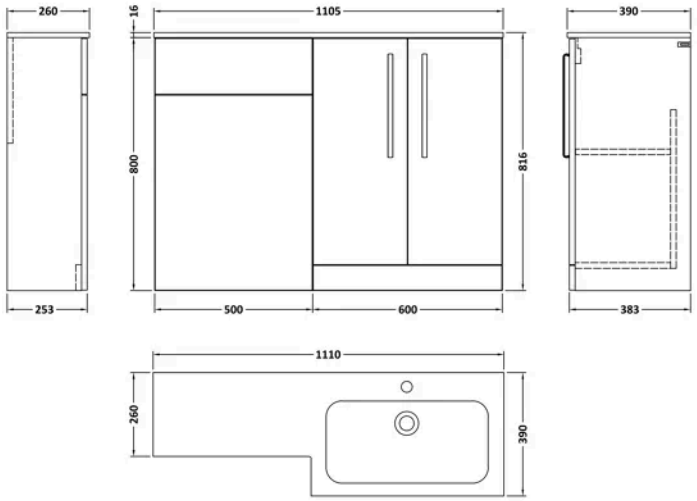

Product Dimensions

Product	800 x 1110 x 390mm (H x W x D)
Packaged	835 x 620 x 375mm (H x W x D)
Nett Weight	37.15 kg
Packaged Weight	37.15 kg

Product Details

Country of Origin	China
Product Material	Mdf Painted Matt,Stone
Colour/Finish	Gloss White
Mount Type	Floor
Style	Contemporary
Construction Method	Cam & Wood Dowel
Construction Type	Rigid
Fascia Finish	Mdf Painted Matt
Handles Included	Yes
Inner Bowl Height	128 mm
Leg Set Included	No
Material Thickness	18 mm
No. Drawers	2
No. Of Tapholes	1
Number Of Bowls	1
Overflow Cover Included	Yes
Overflow Included	Yes
Tap Included	No
Waste Included	No

© ROXOR Group

Sales Code: SY-GEHCR **Barcode:** 5056474585975 **Brand:** Synergy **Description:** Synergy Gero 320mm Chrome D Handle



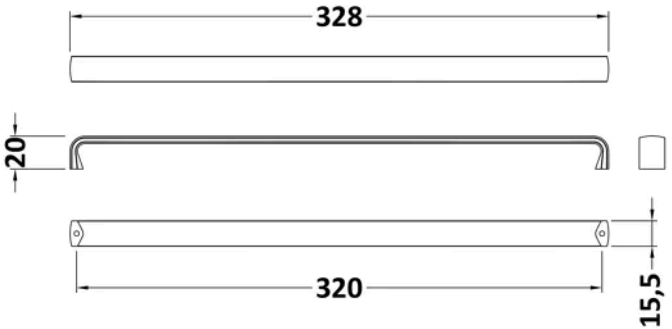

Product Dimensions

Product	20 x 328 x 16mm (H x W x D)
Packaged	20 x 40 x 320mm (H x W x D)
Nett Weight	0.16 kg
Packaged Weight	0.16 kg

Packaging Details

Box Qty	1
Label Size (mm)	50 x 100
Label Colour	White
Label Qty	1.0000

Product Details

Country of Origin	China
Product Material	Stainless Steel
Colour/Finish	Chrome
Style	Contemporary
Handle Type	D Shape
Fixings Included	Yes

© ROXOR Group

Sales Code: SY-OM06-GW **Barcode:** 5056474586576 **Brand:** Synergy **Description:** Synergy Omerg Gloss White 500mm Floor Standing WC Unit



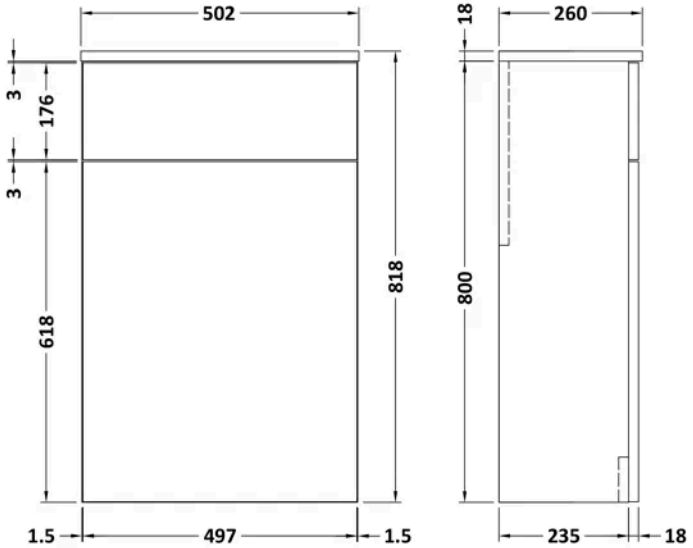

Product Dimensions

Product	795 x 502 x 260mm (H x W x D)
Packaged	825 x 525 x 260mm (H x W x D)
Nett Weight	13.1 kg
Packaged Weight	13.6 kg

Packaging Details

Box Qty	2

Product Details

Country of Origin	China
Product Material	Mfc Painted Gloss
Colour/Finish	Gloss White
Mount Type	Floor
Style	Contemporary
Construction Method	Cam & Wood Dowel
Construction Type	Rigid
Fascia Finish	Mdf Painted Gloss
Fsc Certified	Yes
Material Thickness	16 mm

© ROXOR Group

Sales Code: SY-OM110RHCM

Barcode: 5056474586750

Brand: Synergy

Description: Synergy Omerg 1 Tap Hole 1100mm Carrera Marble Right Hand Stone Furniture Basin



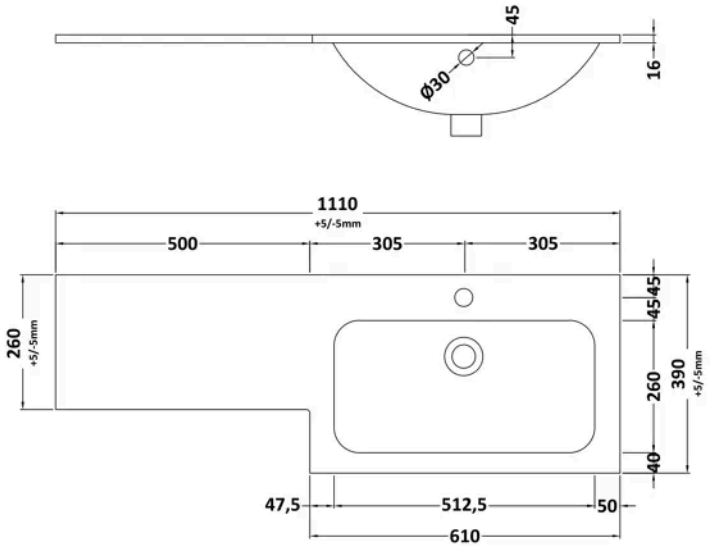

Product Dimensions

Product	16 x 1110 x 390mm (H x W x D)
Packaged	200 x 1175 x 460mm (H x W x D)
Nett Weight	16.5 kg
Packaged Weight	17 kg

Packaging Details

Box Qty	1

Product Details

Country of Origin	China
Product Material	Stone
Colour/Finish	Carrera Marble
Style	Contemporary
Bottle Trap Included	No
Ce Certified	Yes
Inner Bowl Depth	260 mm
Inner Bowl Height	128 mm
Inner Bowl Width	513 mm
No. Of Tapholes	1
Number Of Bowls	1
Overflow Cover Included	Yes
Overflow Included	Yes
Tap Included	No
Waste Included	No

© ROXOR Group

Sales Code: SY-OM60FSDRGW **Barcode:** 5056474587009 **Brand:** Synergy **Description:** Synergy Omerg 600 2 Dr FS w/ Handles, GW



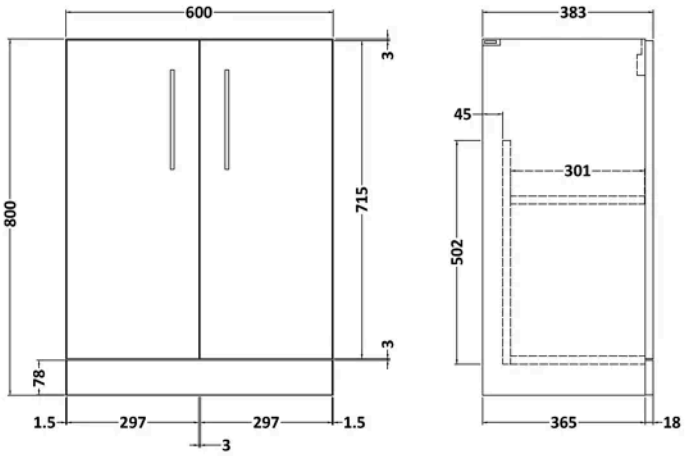

Product Dimensions

Product	800 x 600 x 383mm (H x W x D)
Packaged	835 x 620 x 375mm (H x W x D)
Nett Weight	19.5 kg
Packaged Weight	20 kg

Packaging Details

Box Qty	1

Product Details

Country of Origin	China
Product Material	Mfc Painted Gloss
Colour/Finish	Gloss White
Mount Type	Floor
Style	Contemporary
Construction Method	Cam & Wood Dowel
Construction Type	Rigid
Fascia Finish	Mdf Painted Gloss
Material Thickness	18 mm
No. Doors	2

© ROXOR Group