**Sales Code:** SY-OM11LCM-PG **Barcode:** 5056883759363 **Brand:** Synergy **Description:** Synergy Omerg Pebble Grey 1100mm Carrera Marble Combination Unit Left Hand



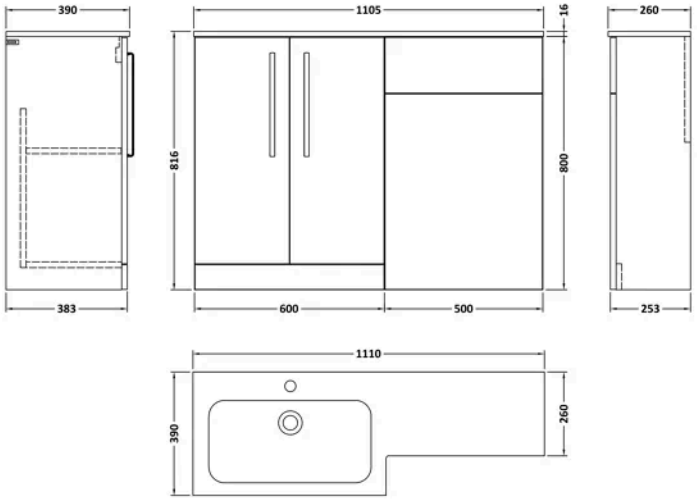


## Product Dimensions

| | |
|---|---|
| Product | 816 x 1110 x 390mm (H x W x D) |
| Packaged | 835 x 620 x 375mm (H x W x D) |
| Nett Weight | 37.15 kg |
| Packaged Weight | 37.15 kg |

## Product Details

| | |
|---|---|
| Country of Origin | China |
| Product Material | Mdf Painted Matt,Stone |
| Colour/Finish | Pebble Grey |
| Mount Type | Floor |
| Style | Contemporary |
| Construction Method | Cam & Wood Dowel |
| Construction Type | Rigid |
| Fascia Finish | Mdf Painted Matt |
| Handles Included | Yes |
| Inner Bowl Height | 128 mm |
| Leg Set Included | No |
| Material Thickness | 18 mm |
| No. Doors | 2 |
| No. Of Tapholes | 1 |
| Number Of Bowls | 1 |
| Overflow Cover Included | Yes |
| Overflow Included | Yes |
| Tap Included | No |
| Waste Included | No |

© ROXOR Group

**Sales Code:** SY-GEHCR **Barcode:** 5056474585975 **Brand:** Synergy **Description:** Synergy Gero 320mm Chrome D Handle



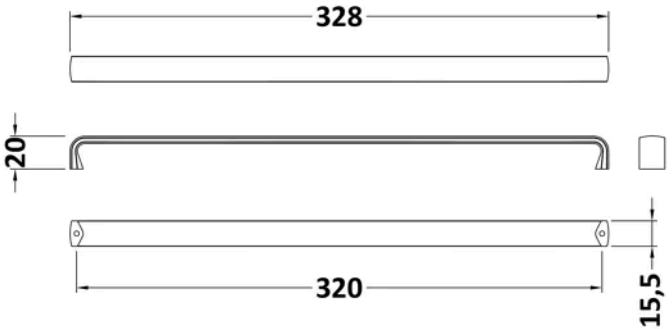


## Product Dimensions

| | |
|---|---|
| Product | 20 x 328 x 16mm (H x W x D) |
| Packaged | 20 x 40 x 320mm (H x W x D) |
| Nett Weight | 0.16 kg |
| Packaged Weight | 0.16 kg |

## Packaging Details

| | |
|---|---|
| Box Qty | 1 |
| Label Size (mm) | 50 x 100 |
| Label Colour | White |
| Label Qty | 1.0000 |

## Product Details

| | |
|---|---|
| Country of Origin | China |
| Product Material | Stainless Steel |
| Colour/Finish | Chrome |
| Style | Contemporary |
| Handle Type | D Shape |
| Fixings Included | Yes |

© ROXOR Group

**Sales Code:** SY-OM06-PG **Barcode:** 5056474586606 **Brand:** Synergy **Description:** Synergy Omerg Pebble Grey 500mm Floor Standing WC Unit



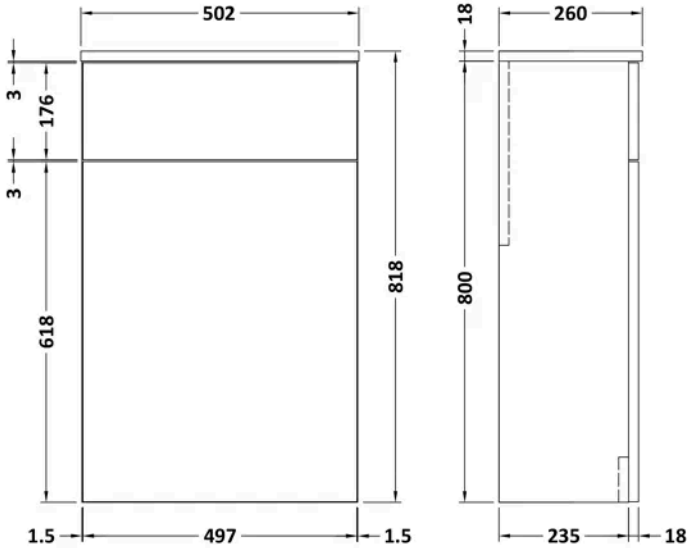


## Product Dimensions

| | |
|---|---|
| Product | 815 x 500 x 260mm (H x W x D) |
| Packaged | 825 x 525 x 260mm (H x W x D) |
| Nett Weight | 13.1 kg |
| Packaged Weight | 13.6 kg |

## Product Details

| | |
|---|---|
| Country of Origin | China |
| Product Material | Mfc Painted Matt |
| Colour/Finish | Pebble Grey |
| Style | Contemporary |
| Construction Method | Cam & Wood Dowel |
| Construction Type | Rigid |
| Fascia Finish | Mdf Painted Matt |
| Material Thickness | 18 mm |

© ROXOR Group

**Sales Code:** SY-OM110LHCM

**Barcode:** 5056474586736

**Brand:** Synergy

**Description:** Synergy Omerg 1 Tap Hole 1100mm Carrera Marble Left Hand Stone Furniture Basin



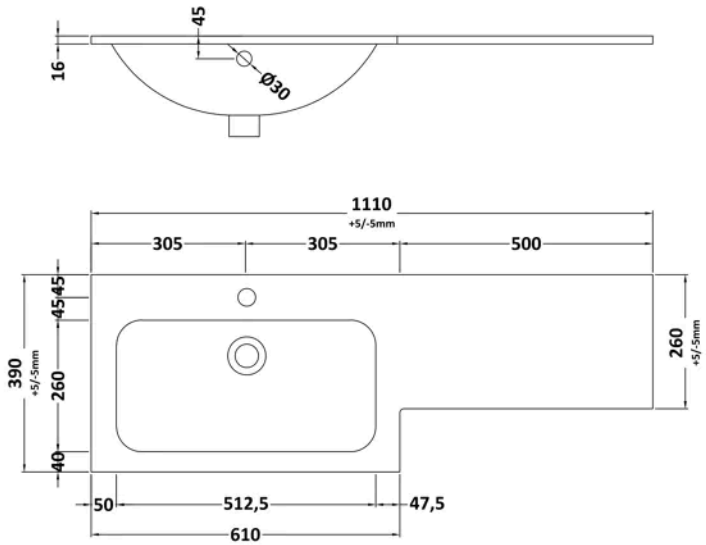


## Product Dimensions

| | |
|---|---|
| Product | 16 x 1110 x 390mm (H x W x D) |
| Packaged | 200 x 1175 x 460mm (H x W x D) |
| Nett Weight | 16.5 kg |
| Packaged Weight | 17 kg |

## Packaging Details

| | |
|---|---|
| Box Qty | 1 |

## Product Details

| | |
|---|---|
| Country of Origin | China |
| Product Material | Stone |
| Colour/Finish | Carrera Marble |
| Style | Contemporary |
| Bottle Trap Included | No |
| Ce Certified | Yes |
| Inner Bowl Depth | 260 mm |
| Inner Bowl Height | 128 mm |
| Inner Bowl Width | 513 mm |
| No. Of Tapholes | 1 |
| Number Of Bowls | 1 |
| Overflow Cover Included | Yes |
| Overflow Included | Yes |
| Tap Included | No |
| Waste Included | No |

© ROXOR Group

**Sales Code:** SY-OM60FSDRPG **Barcode:** 5056474587030 **Brand:** Synergy **Description:** Synergy Omerg 600 2 Dr FS w/ Handles, PG

*Product Image Not Available*

*Technical Drawing Not Available*

**Product Dimensions**

| | |
|---|---|
| Packaged | 835 x 620 x 375mm (H x W x D) |
| Nett Weight | 19.5 kg |
| Packaged Weight | 20 kg |

© ROXOR Group