Sales Code: SY-OM04C2-GN **Barcode:** 5056883759158 **Brand:** Synergy **Description:** Synergy Omerg Satin Green 1200mm Wall Hung 2 Draw Double Ceramic Basin



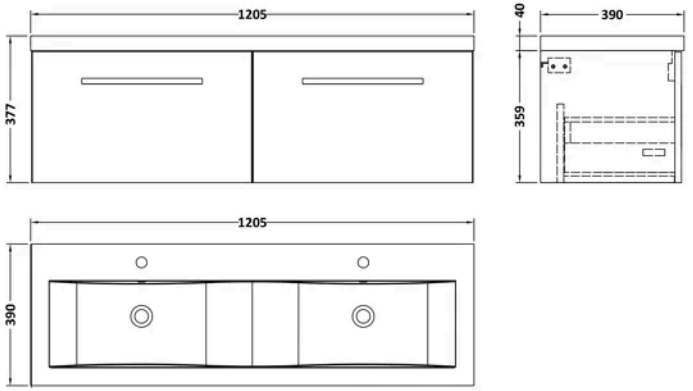

Product Dimensions

Product	377 x 1205 x 390mm (H x W x D)
Packaged	391 x 632 x 391mm (H x W x D)
Nett Weight	45.27 kg
Packaged Weight	45.27 kg

Product Details

Country of Origin	China
Product Material	Mdf Painted Matt
Colour/Finish	Satin Green
Mount Type	Wall Hung
Style	Contemporary
Construction Method	Cam & Wood Dowel
Construction Type	Rigid
Fascia Finish	Mdf Painted Matt
Handles Included	Yes
Inner Bowl Height	103 mm
Leg Set Included	No
Material Thickness	18 mm
No. Drawers	2
No. Of Tapholes	1
Number Of Bowls	1
Overflow Cover Included	Yes
Overflow Included	Yes
Tap Included	No
Waste Included	No
Waste Shroud	No

© ROXOR Group

Sales Code: SY-GEHCR **Barcode:** 5056474585975 **Brand:** Synergy **Description:** Synergy Gero 320mm Chrome D Handle



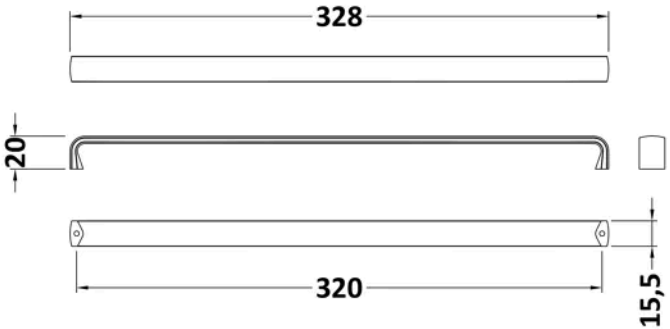

Product Dimensions

Product	20 x 328 x 16mm (H x W x D)
Packaged	20 x 40 x 320mm (H x W x D)
Nett Weight	0.16 kg
Packaged Weight	0.16 kg

Packaging Details

Label Size (mm)	50 x 100
Label Colour	White
Label Qty	1.0000

Product Details

Country of Origin	China
Product Material	Stainless Steel
Colour/Finish	Chrome
Style	Contemporary
Handle Type	D Shape
Fixings Included	Yes

© ROXOR Group

Sales Code: SY-OM120 **Barcode:** 5056474586880 **Brand:** Synergy **Description:** Synergy Omerg 2 Tap Hole 1200mm Ceramic Mid-Edge Twin Basin



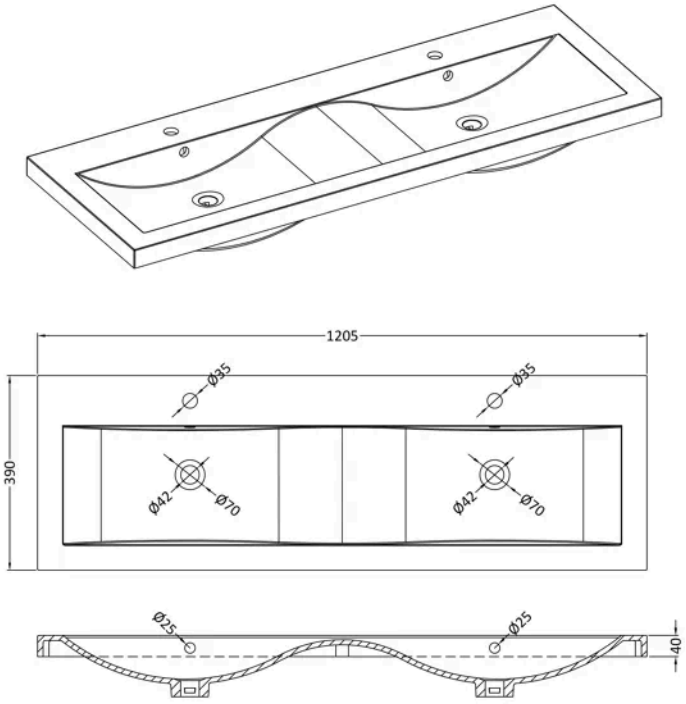

Product Dimensions

Product	390 x 1205 x 175mm (H x W x D)
Packaged	100 x 1205 x 400mm (H x W x D)
Nett Weight	18.12 kg
Packaged Weight	18.12 kg

Product Details

Country of Origin	China
Product Material	Vitreous China
Colour/Finish	White
Style	Contemporary
Ce Certified	Yes
Inner Bowl Height	103 mm
No. Of Tapholes	2
Number Of Bowls	2
Overflow Included	Yes
Tap Included	No
Waste Included	No

© ROXOR Group

Sales Code: SY-OM60WHDWGN **Barcode:** 5056474587122 **Brand:** Synergy **Description:** Synergy Omerg 600 1 Dw WH w/ Handles, GN



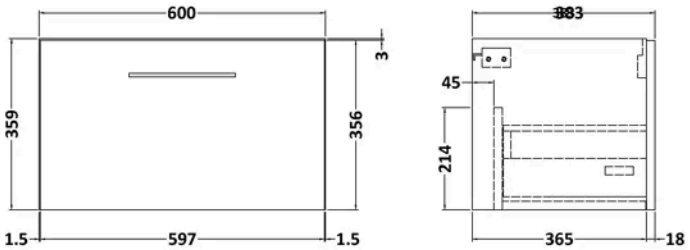

Product Dimensions

Product	359 x 600 x 383mm (H x W x D)
Packaged	391 x 632 x 391mm (H x W x D)
Nett Weight	13 kg
Packaged Weight	13.5 kg

Product Details

Country of Origin	China
Product Material	Mdf Painted Matt
Colour/Finish	Satin Green
Mount Type	Wall Hung
Style	Contemporary
Construction Method	Cam & Wood Dowel
Construction Type	Rigid
Fascia Finish	Mfc Painted Matt
Material Thickness	18 mm
No. Drawers	1

© ROXOR Group