**Sales Code:** SY-OM03-BL **Barcode:** 5056474586460 **Brand:** Synergy **Description:** Synergy Omerg 800mm Soft Black Satin Soft Black 2 Door Floor Standing Unit



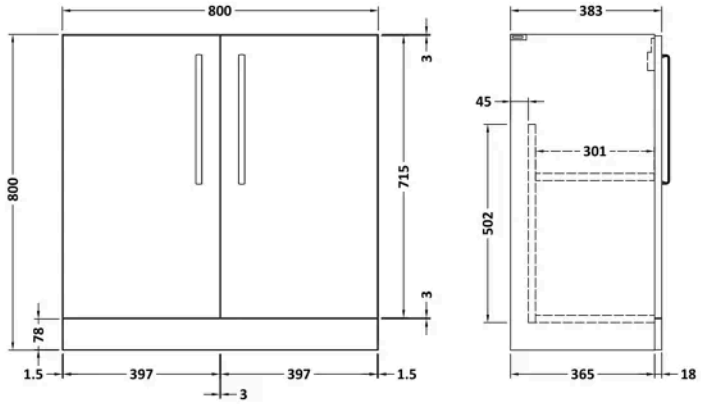


## Product Dimensions

| | |
|---|---|
| Product | 800 x 800 x 383mm (H x W x D) |
| Packaged | 835 x 820 x 375mm (H x W x D) |
| Nett Weight | 26.15 kg |
| Packaged Weight | 26.15 kg |

## Product Details

| | |
|---|---|
| Country of Origin | China |
| Product Material | Mdf Painted Matt |
| Colour/Finish | Soft Black |
| Mount Type | Floor |
| Style | Contemporary |
| Handle Type | D Shape |
| Construction Method | Cam & Wood Dowel |
| Construction Type | Rigid |
| Fascia Finish | Mfc Painted Matt |
| Handles Included | Yes |
| Material Thickness | 18 mm |
| No. Doors | 2 |

© ROXOR Group

**Sales Code:** SY-GEHCR **Barcode:** 5056474585975 **Brand:** Synergy **Description:** Synergy Gero 320mm Chrome D Handle



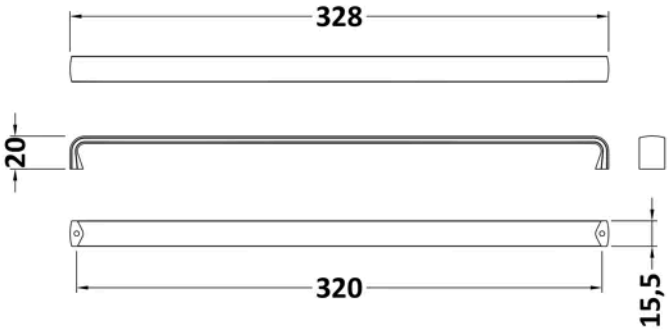


## Product Dimensions

| | |
|---|---|
| Product | 20 x 328 x 16mm (H x W x D) |
| Packaged | 20 x 40 x 320mm (H x W x D) |
| Nett Weight | 0.16 kg |
| Packaged Weight | 0.16 kg |

## Packaging Details

| | |
|---|---|
| Box Qty | 1 |
| Label Size (mm) | 50 x 100 |
| Label Colour | White |
| Label Qty | 1.0000 |

## Product Details

| | |
|---|---|
| Country of Origin | China |
| Product Material | Stainless Steel |
| Colour/Finish | Chrome |
| Style | Contemporary |
| Handle Type | D Shape |
| Fixings Included | Yes |

© ROXOR Group

**Sales Code:** SY-OM80FSDRBL **Barcode:** 5056474587092 **Brand:** Synergy **Description:** Synergy Omerg 800 2 Dr FS w/ Handles, SB



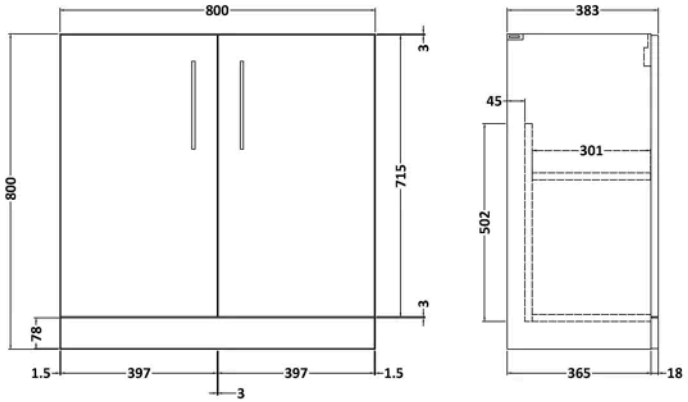


## Product Dimensions

| | |
|---|---|
| Product | 800 x 800 x 383mm (H x W x D) |
| Packaged | 835 x 820 x 375mm (H x W x D) |
| Nett Weight | 25.5 kg |
| Packaged Weight | 26 kg |

## Packaging Details

| | |
|---|---|
| Box Qty | 1 |

## Product Details

| | |
|---|---|
| Country of Origin | China |
| Product Material | Mdf Painted Matt |
| Colour/Finish | Soft Black |
| Mount Type | Floor |
| Style | Contemporary |
| Construction Method | Cam & Wood Dowel |
| Construction Type | Rigid |
| Fascia Finish | Mfc Painted Matt |
| Material Thickness | 18 mm |
| No. Doors | 2 |

© ROXOR Group