Sales Code: SY-OM02M-PG **Barcode:** 5056883757345 **Brand:** Synergy **Description:** Synergy Omerg Pebble Grey 600mm Floor Standing 2Door & Minimalist Basin



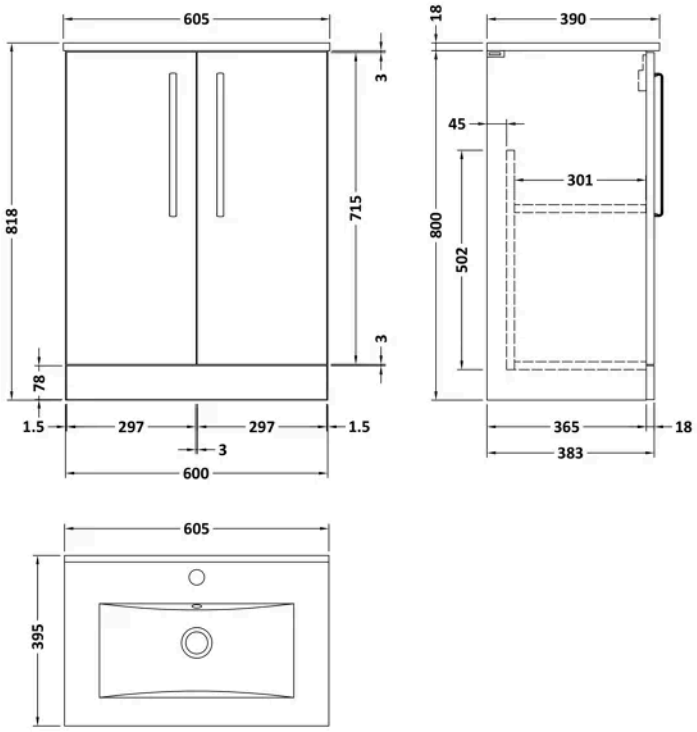

Product Dimensions

Product	818 x 605 x 395mm (H x W x D)
Packaged	835 x 620 x 375mm (H x W x D)
Nett Weight	31.55 kg
Packaged Weight	31.55 kg

Product Details

Country of Origin	China
Product Material	Mdf Painted Matt
Colour/Finish	Pebble Grey
Mount Type	Floor
Style	Contemporary
Construction Method	Cam & Wood Dowel
Construction Type	Rigid
Fascia Finish	Mdf Painted Matt
Handles Included	Yes
Inner Bowl Height	130 mm
Leg Set Included	No
Material Thickness	18 mm
No. Doors	2
No. Of Tapholes	1
Number Of Bowls	1
Overflow Cover Included	Yes
Overflow Included	Yes
Tap Included	No
Waste Included	No

© ROXOR Group

Sales Code: SY-GEHCR **Barcode:** 5056474585975 **Brand:** Synergy **Description:** Synergy Gero 320mm Chrome D Handle



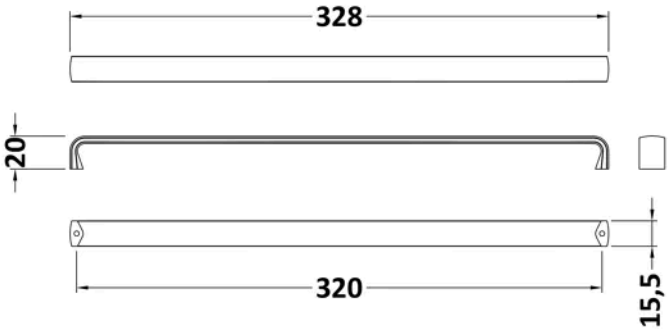

Product Dimensions

Product	20 x 328 x 16mm (H x W x D)
Packaged	20 x 40 x 320mm (H x W x D)
Nett Weight	0.16 kg
Packaged Weight	0.16 kg

Packaging Details

Label Size (mm)	50 x 100
Label Colour	White
Label Qty	1.0000

Product Details

Country of Origin	China
Product Material	Stainless Steel
Colour/Finish	Chrome
Style	Contemporary
Handle Type	D Shape
Fixings Included	Yes

© ROXOR Group

Sales Code: SY-OM60FSDRPG **Barcode:** 5056474587030 **Brand:** Synergy **Description:** Synergy Omerg 600 2 Dr FS w/ Handles, PG

Product Image Not Available

Technical Drawing Not Available

Product Dimensions

Packaged	835 x 620 x 375mm (H x W x D)
Nett Weight	19.5 kg
Packaged Weight	20 kg

© ROXOR Group

Sales Code: SY-OM60M **Barcode:** 5056474586804 **Brand:** Synergy **Description:** Synergy Omerg 1 Tap Hole 600mm Minimalist Ceramic Basin



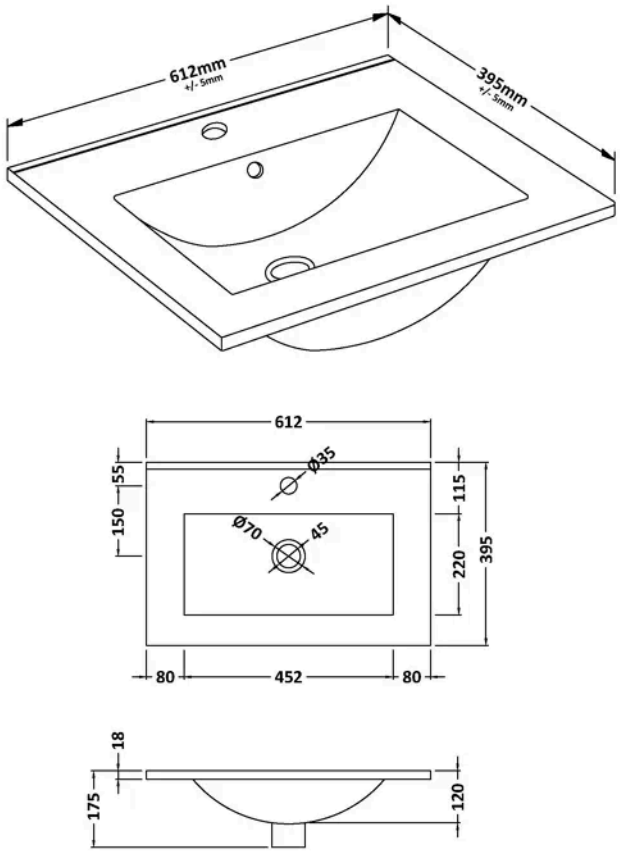

Product Dimensions

Product	175 x 612 x 395mm (H x W x D)
Packaged	400 x 620 x 200mm (H x W x D)
Nett Weight	10.7 kg
Packaged Weight	11.4 kg

Product Details

Country of Origin	China
Product Material	Vitreous China
Colour/Finish	White
Style	Contemporary
Ce Certified	Yes
Inner Bowl Height	130 mm
No. Of Tapholes	1
Number Of Bowls	1
Overflow Included	Yes
Tap Included	No
Waste Included	No

© ROXOR Group