Sales Code: SY-OM01-GN **Barcode:** 5056474586347 **Brand:** Synergy **Description:** Synergy Omerg 500mm Satin Green 2 Door Floor Standing Unit



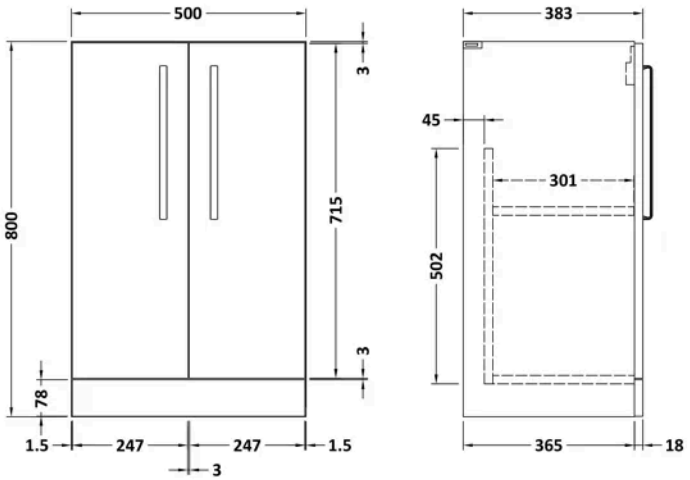

Product Dimensions

Product	800 x 500 x 383mm (H x W x D)
Packaged	835 x 520 x 375mm (H x W x D)
Nett Weight	18.15 kg
Packaged Weight	18.15 kg

Product Details

Country of Origin	China
Product Material	Mdf Painted Matt
Colour/Finish	Satin Green
Mount Type	Floor
Style	Contemporary
Handle Type	D Shape
Construction Method	Cam & Wood Dowel
Construction Type	Rigid
Fascia Finish	Mfc Painted Matt
Handles Included	Yes
Material Thickness	18 mm
No. Doors	2

© ROXOR Group

Sales Code: SY-GEHCR **Barcode:** 5056474585975 **Brand:** Synergy **Description:** Synergy Gero 320mm Chrome D Handle



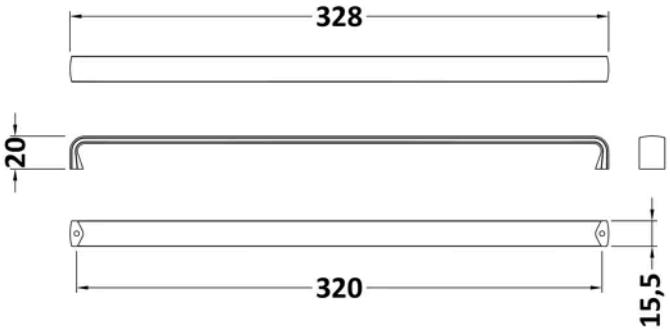

Product Dimensions

Product	20 x 328 x 16mm (H x W x D)
Packaged	20 x 40 x 320mm (H x W x D)
Nett Weight	0.16 kg
Packaged Weight	0.16 kg

Packaging Details

Label Size (mm)	50 x 100
Label Colour	White
Label Qty	1.0000

Product Details

Country of Origin	China
Product Material	Stainless Steel
Colour/Finish	Chrome
Style	Contemporary
Handle Type	D Shape
Fixings Included	Yes

© ROXOR Group

Sales Code: SY-OM50FSDRGN **Barcode:** 5056474586972 **Brand:** Synergy **Description:** Synergy Omerg 500 2 Dr FS w/ Handles, GN



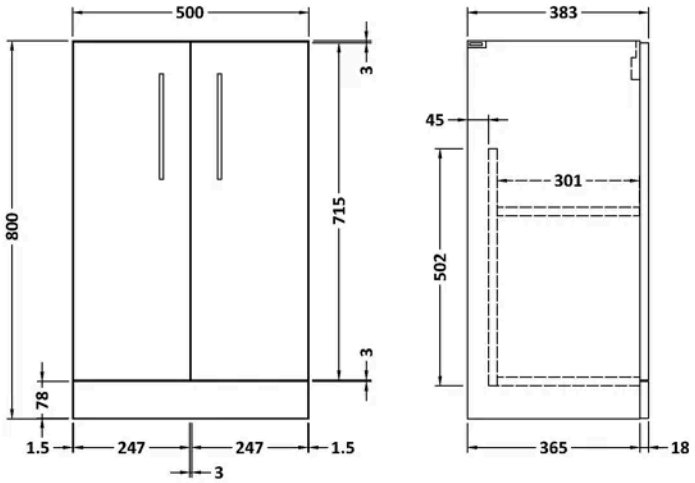

Product Dimensions

Product	800 x 500 x 383mm (H x W x D)
Packaged	835 x 520 x 375mm (H x W x D)
Nett Weight	17.5 kg
Packaged Weight	18 kg

Product Details

Country of Origin	China
Product Material	Mdf Painted Matt
Colour/Finish	Satin Green
Mount Type	Floor
Style	Contemporary
Construction Method	Cam & Wood Dowel
Construction Type	Rigid
Fascia Finish	Mfc Painted Matt
Material Thickness	18 mm
No. Doors	2

© ROXOR Group