Sales Code: SY-HOR009 **Barcode:** 5056474591310 **Brand:** Synergy **Description:** Synergy Horse Chrome 762 x 685mm Horizontal Towel Rail



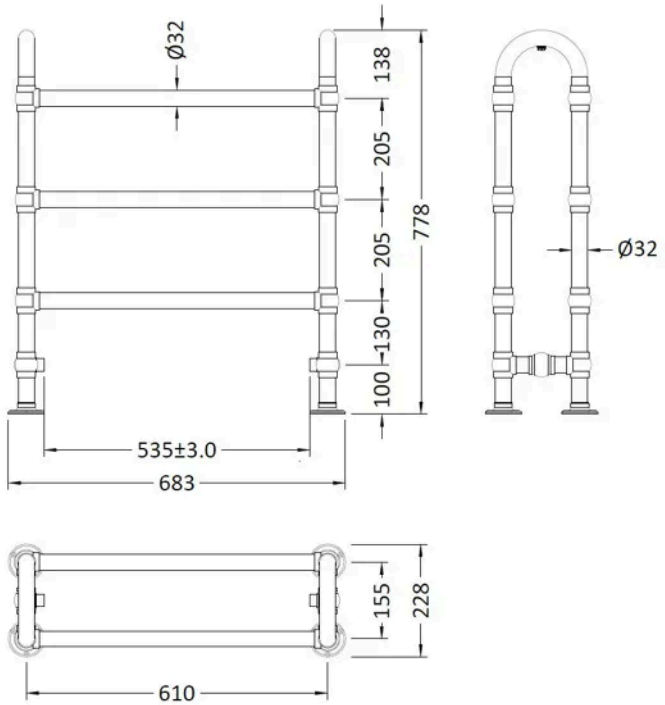

Product Dimensions

Product	778 x 683 x 228mm (H x W x D)
Packaged	245 x 720 x 810mm (H x W x D)
Nett Weight	11.8 kg
Packaged Weight	13.3 kg

Packaging Details

Box Qty	1
Label Size (mm)	50 x 100
Label Colour	White
Label Qty	2.0000

Product Details

Country of Origin	China
Product Material	Steel
Colour/Finish	Chrome
Mount Type	Floor
Style	Traditional
Pipe Centres	520
Brackets Included	Yes
Btu Output 30	526
Btu Output 50	987
Ce Certified	Yes
Declaration Of Performance	No
Fuel Type	Water
Maximum Projection	230 mm
Number Of Heat Settings	1.0000
Rohs Certification	No
Thermal Output 30	154.0000 Watts
Thermal Output 50	289.0000 Watts
Tube Diameter	32 mm
Ukca Certified	No
Weee Certification	No

© ROXOR Group