Sales Code: SY-HEN307 **Barcode:** 5056883738955 **Brand:** Synergy **Description:** Synergy Henbury Chrome Double Towel Rail



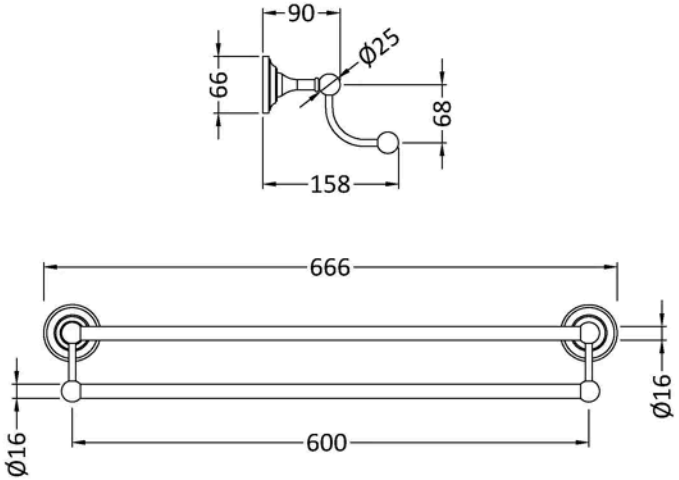

Product Dimensions

Product	105 x 660 x 170mm (H x W x D)
Packaged	75 x 105 x 620mm (H x W x D)
Nett Weight	0.9 kg
Packaged Weight	1 kg

Packaging Details

Box Qty	1

Product Details

Country of Origin	China
Product Material	Brass
Colour/Finish	Chrome
Style	Traditional

© ROXOR Group