Sales Code: SY-HEN118 **Barcode:** 5056474585340 **Brand:** Synergy **Description:** Synergy Henbury Traditional Back to Wall Pan



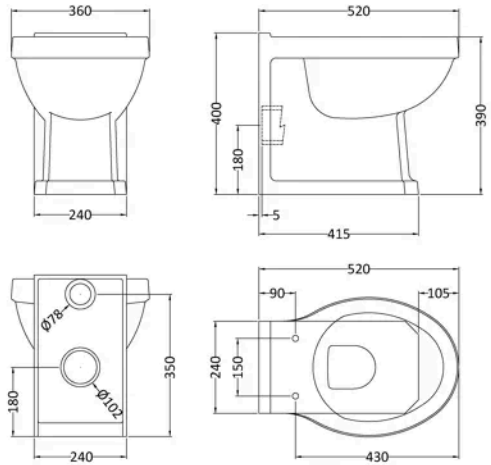

Product Dimensions

Product	420 x 360 x 520mm (H x W x D)
Packaged	430 x 370 x 530mm (H x W x D)
Nett Weight	20.74 kg
Packaged Weight	21.5 kg

Packaging Details

Box Qty	1

Product Details

Country of Origin	China
Product Material	Vitreous China
Colour/Finish	White
Style	Traditional
Ce Certified	Yes
Includes Seat	No
Pan Type	Back To Wall

© ROXOR Group