Sales Code: SY-HEN108 **Barcode:** 5056474585197 **Brand:** Synergy **Description:** Synergy Henbury 1 Tap Hole 500mm Ceramic Basin



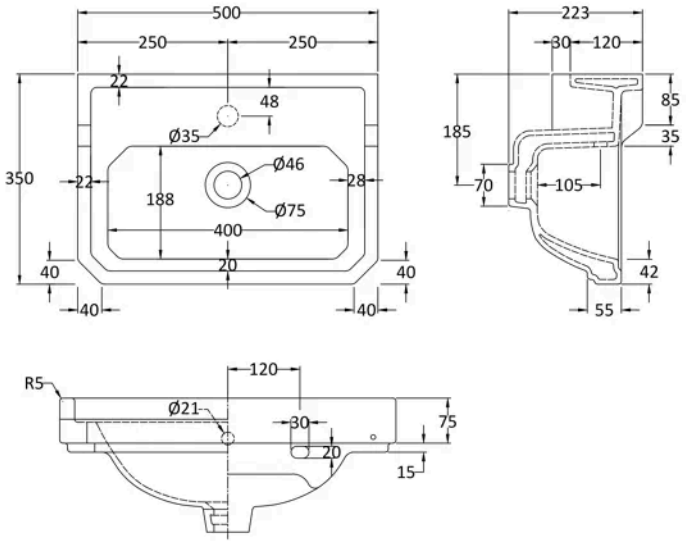

Product Dimensions

Product	223 x 500 x 350mm (H x W x D)
Packaged	245 x 505 x 375mm (H x W x D)
Nett Weight	12.53 kg
Packaged Weight	13 kg

Packaging Details

Box Qty	1

Product Details

Country of Origin	China
Product Material	Vitreous China
Colour/Finish	White
Style	Traditional
Ce Certified	Yes
Inner Bowl Height	95 mm
No. Of Tapholes	1
Number Of Bowls	1
Overflow Included	Yes
Tap Included	No
Waste Included	No

© ROXOR Group