Sales Code: SY-HEN010 **Barcode:** 5056883758021 **Brand:** Synergy **Description:** Synergy Henbury 560mm 3 Tap Hole Basin & Pedestal



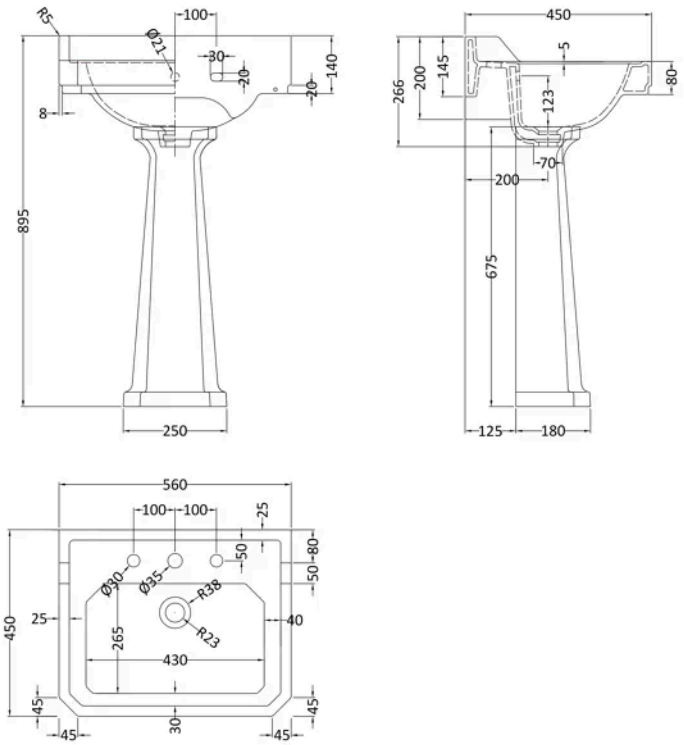

Product Dimensions

Product	895 x 560 x 450mm (H x W x D)
Packaged	290 x 685 x 200mm (H x W x D)
Nett Weight	29.1 kg
Packaged Weight	29.1 kg

Product Details

Country of Origin	China
Product Material	Vitreous China
Colour/Finish	White
Style	Traditional
Ce Certified	Yes
Inner Bowl Height	110 mm
No. Of Tapholes	3
Number Of Bowls	1
Overflow Included	Yes
Tap Included	No
Waste Included	No

© ROXOR Group

Sales Code: SY-HEN102 **Barcode:** 5056474585081 **Brand:** Synergy **Description:** Synergy Henbury White Traditional Full Pedestal



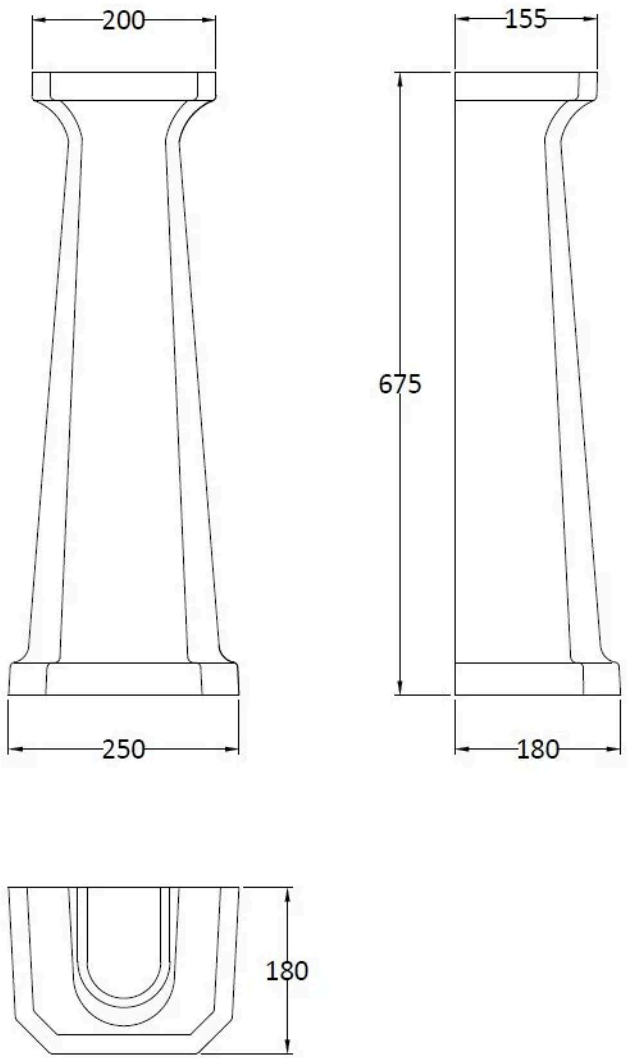

Product Dimensions

Product	670 x 250 x 180mm (H x W x D)
Packaged	290 x 685 x 200mm (H x W x D)
Nett Weight	11 kg
Packaged Weight	11.6 kg

Product Details

Country of Origin	China
Product Material	Vitreous China
Colour/Finish	White
Mount Type	Floor
Style	Contemporary
Ce Certified	Yes

© ROXOR Group

Sales Code: SY-HEN107 **Barcode:** 5056474585173 **Brand:** Synergy **Description:** Synergy Henbury 3 Tap Hole 560mm Ceramic Basin



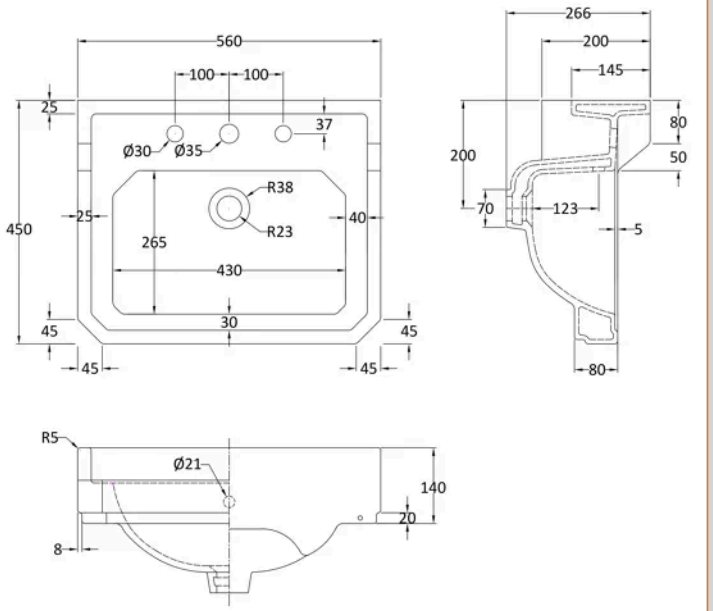

Product Dimensions

Product	266 x 560 x 450mm (H x W x D)
Packaged	287 x 575 x 490mm (H x W x D)
Nett Weight	16.7 kg
Packaged Weight	17.5 kg

Product Details

Country of Origin	United Kingdom
Product Material	Vitreous China
Colour/Finish	White
Style	Traditional
Ce Certified	Yes
Inner Bowl Height	110 mm
No. Of Tapholes	3
Number Of Bowls	1
Overflow Included	Yes
Tap Included	No
Waste Included	No

© ROXOR Group