Sales Code: SY-HEN003 **Barcode:** 5056883757956 **Brand:** Synergy **Description:** Synergy Henbury High Level Toilet



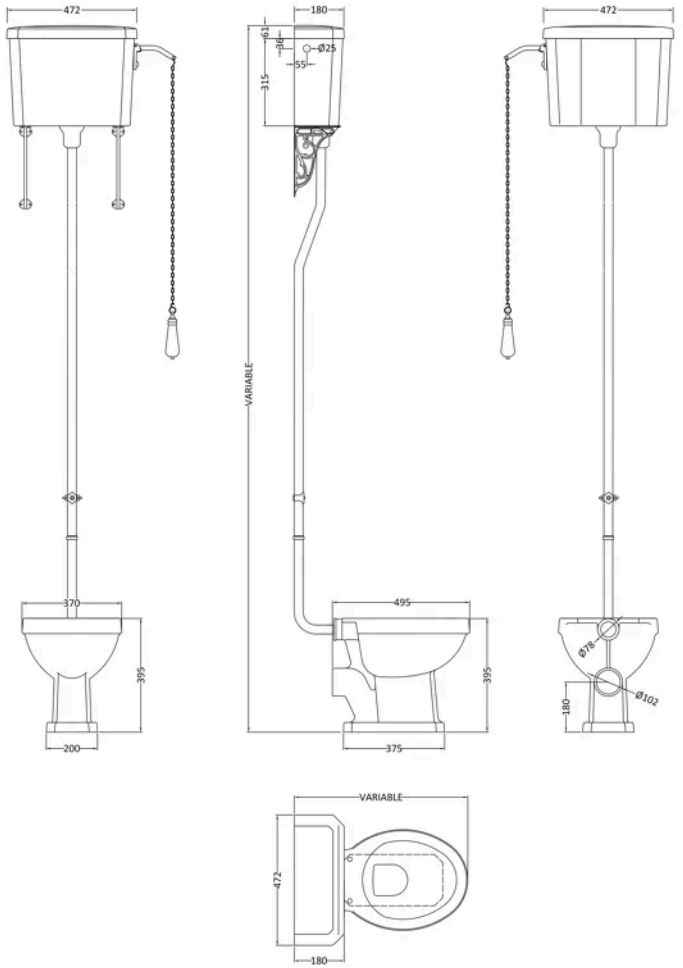

Product Dimensions

Product	2140 x 472 x 625mm (H x W x D)
Packaged	425 x 525 x 430mm (H x W x D)
Nett Weight	35.47 kg
Packaged Weight	35.47 kg

Product Details

Country of Origin	China
Product Material	Vitreous China
Colour/Finish	White
Style	Traditional
Ce Certified	Yes
Includes Seat	No
Pan Type	Open To Wall

© ROXOR Group

Sales Code: SY-HEN114 **Barcode:** 5056474585302 **Brand:** Synergy **Description:** Synergy Henbury High/Low Level Pan



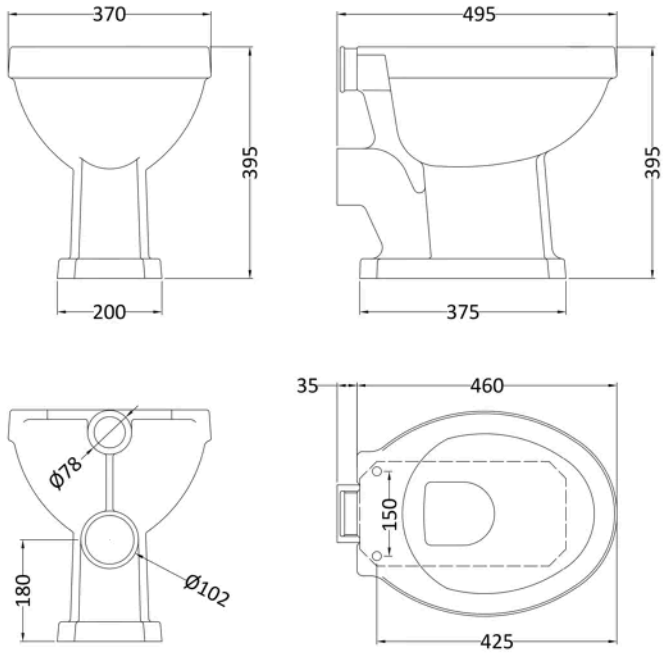

Product Dimensions

Product	395 x 370 x 495mm (H x W x D)
Packaged	425 x 525 x 430mm (H x W x D)
Nett Weight	15.61 kg
Packaged Weight	16.5 kg

Packaging Details

Box Qty	1

Product Details

Country of Origin	China
Product Material	Vitreous China
Colour/Finish	White
Style	Traditional
Ce Certified	Yes
Includes Seat	No
Pan Type	Open To Wall

© ROXOR Group

Sales Code: SY-HEN117 **Barcode:** 5056474585333 **Brand:** Synergy **Description:** Synergy Henbury High Level Cistern With Fittings



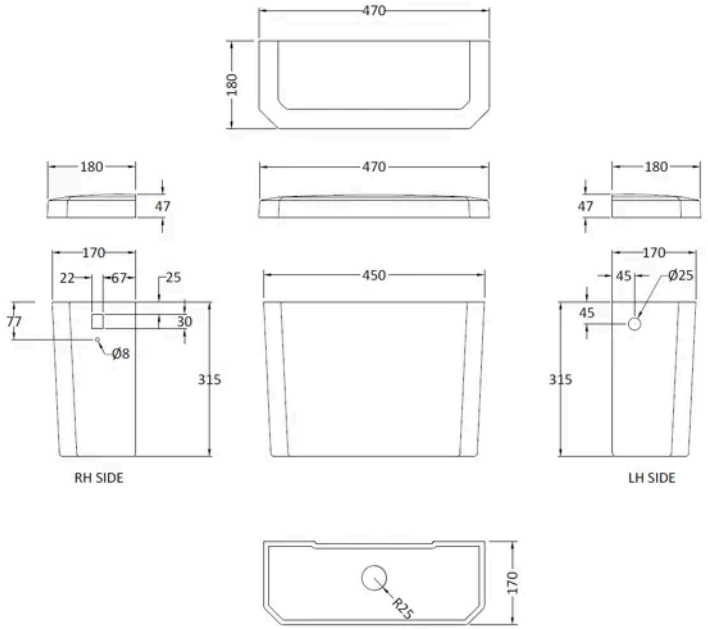

Product Dimensions

Product	360 x 510 x 200mm (H x W x D)
Packaged	316 x 168 x 455mm (H x W x D)
Nett Weight	14.5 kg
Packaged Weight	15.9 kg

Packaging Details

Box Qty	1

Product Details

Country of Origin	China
Product Material	Vitreous China
Colour/Finish	White
Style	Contemporary
Ce Certified	Yes
Includes Seat	No

© ROXOR Group

Sales Code: SY-HEN122 **Barcode:** 5056474585388 **Brand:** Synergy **Description:** Synergy Henbury Chrome High Level Flush Pipe Pack



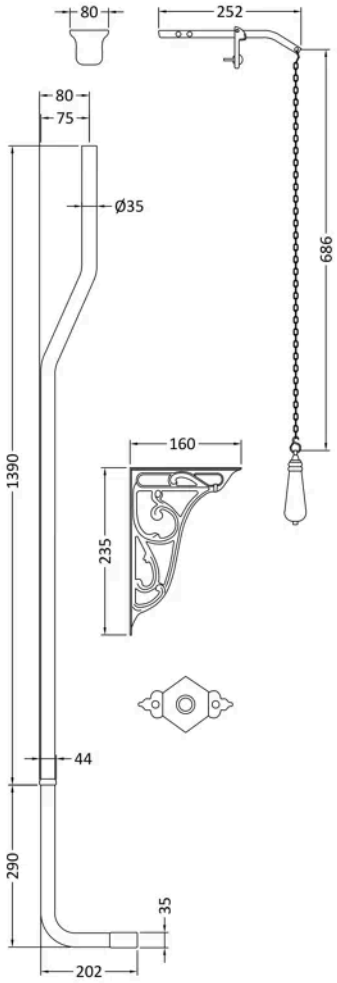

Product Dimensions

Product	1680 x 80 x 202mm (H x W x D)
Packaged	100 x 185 x 1435mm (H x W x D)
Nett Weight	2.8 kg
Packaged Weight	3.07 kg

Packaging Details

Box Qty	1
Label Size (mm)	50 x 100
Label Colour	White
Label Qty	2.0000

Product Details

Country of Origin	China
Product Material	Brass
Colour/Finish	Chrome
Style	Traditional
Fixings Included	Yes
Product Diameter	35 mm

© ROXOR Group