Sales Code: SY-GE05C-SG

Barcode: 5056883756997

Brand: Synergy

Description: Synergy Gero Satin Grey 800mm 2 Drawer Wall Hung Vanity Unit and 1 Tap Hole Ceramic Basin



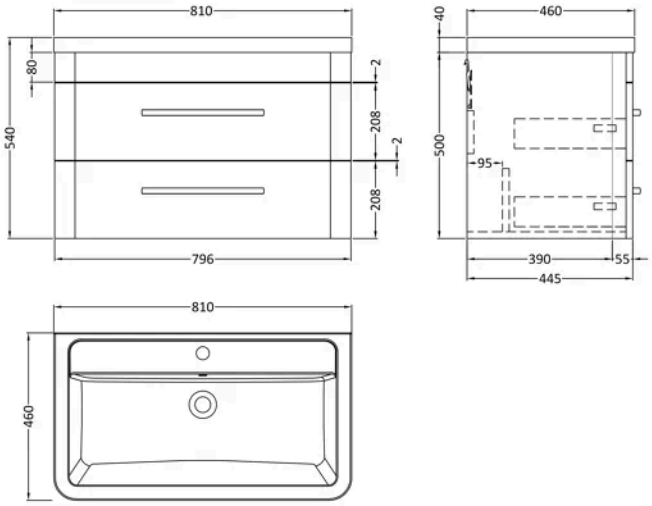

Product Dimensions

Product	540 x 810 x 460mm (H x W x D)
Packaged	810 x 530 x 480mm (H x W x D)
Nett Weight	50.27 kg
Packaged Weight	50.27 kg

Product Details

Country of Origin	China
Product Material	Mdf Painted Gloss
Colour/Finish	Satin Grey
Mount Type	Wall Hung
Style	Contemporary
Handle Type	D Shape
Construction Method	Cam & Wood Dowel
Ce Certified	Yes
Construction Type	Rigid
Fascia Finish	Mdf Painted Gloss
Fsc Certified	Yes
Handles Included	Yes
Inner Bowl Height	105 mm
Material Thickness	18 mm
No. Drawers	2
No. Of Tapholes	1
Number Of Bowls	1
Overflow Included	Yes
Tap Included	No

© ROXOR Group

Sales Code: SY-GE80C **Barcode:** 5056474585968 **Brand:** Synergy **Description:** Synergy Gero 1 Tap Hole 800mm Ceramic Curved Basin



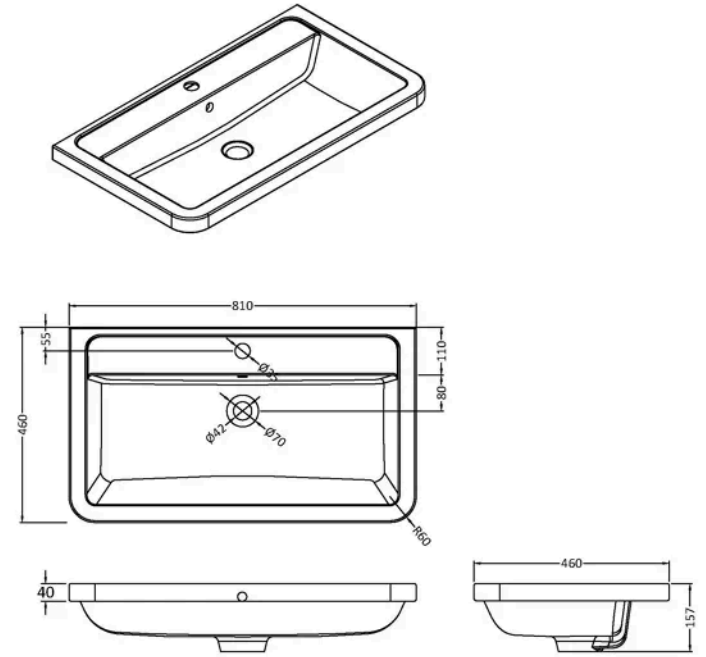

Product Dimensions

Product	450 x 800 x 157mm (H x W x D)
Packaged	167 x 840 x 470mm (H x W x D)
Nett Weight	18.12 kg
Packaged Weight	18.12 kg

Packaging Details

Box Qty	1

Product Details

Country of Origin	China
Product Material	Vitreous China
Colour/Finish	White
Style	Contemporary
Ce Certified	Yes
Inner Bowl Height	105 mm
No. Of Tapholes	1
Number Of Bowls	1
Overflow Included	Yes
Tap Included	No
Waste Included	No

© ROXOR Group

Sales Code: SY-GE80WHDWSG **Barcode:** 5056474586231 **Brand:** Synergy **Description:** Synergy Gero 800 2 Drawer WH, SG

Product Image Not Available

Technical Drawing Not Available

Product Dimensions

Product	500 x 796 x 445mm (H x W x D)
Packaged	810 x 530 x 480mm (H x W x D)
Nett Weight	32 kg
Packaged Weight	32 kg

Packaging Details

Box Qty	1

Product Details

Country of Origin	China
Product Material	Mdf Painted Matt
Colour/Finish	Satin Grey
Mount Type	Wall Hung
Style	Contemporary
Construction Method	Cam & Wood Dowel
Construction Type	Rigid
Fascia Finish	Mfc Painted Matt
Handles Included	Yes
Material Thickness	18 mm
No. Drawers	2

© ROXOR Group

Sales Code: SY-GEHCR **Barcode:** 5056474585975 **Brand:** Synergy **Description:** Synergy Gero 320mm Chrome D Handle



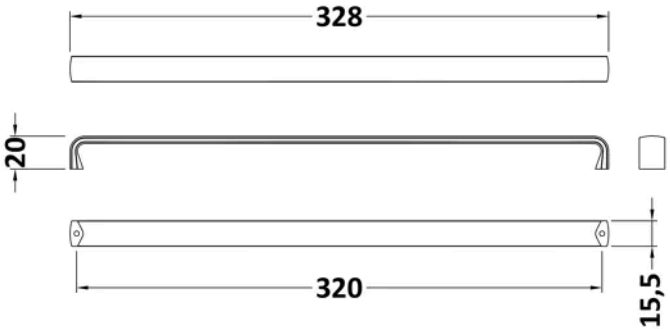

Product Dimensions

Product	20 x 328 x 16mm (H x W x D)
Packaged	20 x 40 x 320mm (H x W x D)
Nett Weight	0.16 kg
Packaged Weight	0.16 kg

Packaging Details

Box Qty	1
Label Size (mm)	50 x 100
Label Colour	White
Label Qty	1.0000

Product Details

Country of Origin	China
Product Material	Stainless Steel
Colour/Finish	Chrome
Style	Contemporary
Handle Type	D Shape
Fixings Included	Yes

© ROXOR Group