Sales Code: SY-GE03P-PG

Barcode: 5056883756676

Brand: Synergy

Description: Synergy Gero Pebble Grey 600mm 2 Drawer Wall Hung Vanity Unit and 1 Tap Hole Polymarble Basin



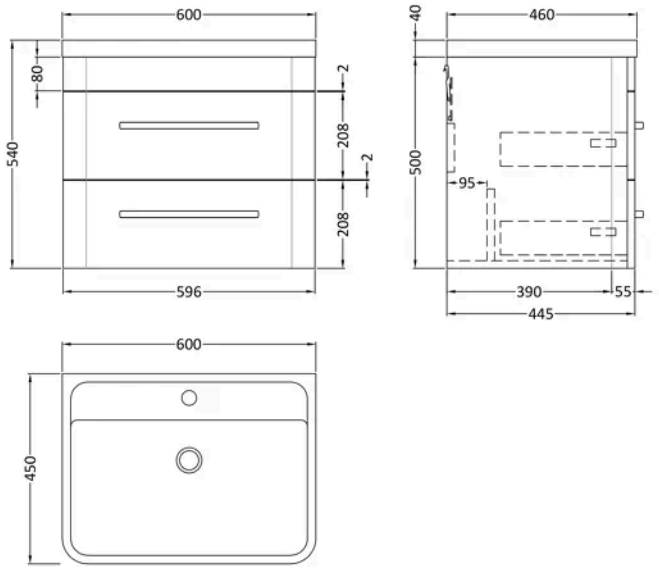

Product Dimensions

Product	540 x 600 x 450mm (H x W x D)
Packaged	550 x 500 x 645mm (H x W x D)
Nett Weight	39.97 kg
Packaged Weight	39.97 kg

Product Details

Country of Origin	China
Product Material	Mdf Painted Matt
Colour/Finish	Pebble Grey
Mount Type	Wall Hung
Style	Contemporary
Handle Type	D Shape
Construction Method	Cam & Wood Dowel
Ce Certified	Yes
Construction Type	Rigid
Fascia Finish	Mdf Painted Matt
Fsc Certified	Yes
Handles Included	Yes
Inner Bowl Height	110 mm
Material Thickness	18 mm
No. Drawers	2
No. Of Tapholes	1
Number Of Bowls	1
Overflow Included	Yes
Tap Included	No

© ROXOR Group

Sales Code: SY-GE60P **Barcode:** 5056474585937 **Brand:** Synergy **Description:** Synergy Gero 1 Tap Hole 600mm Polymarble Curved Basin



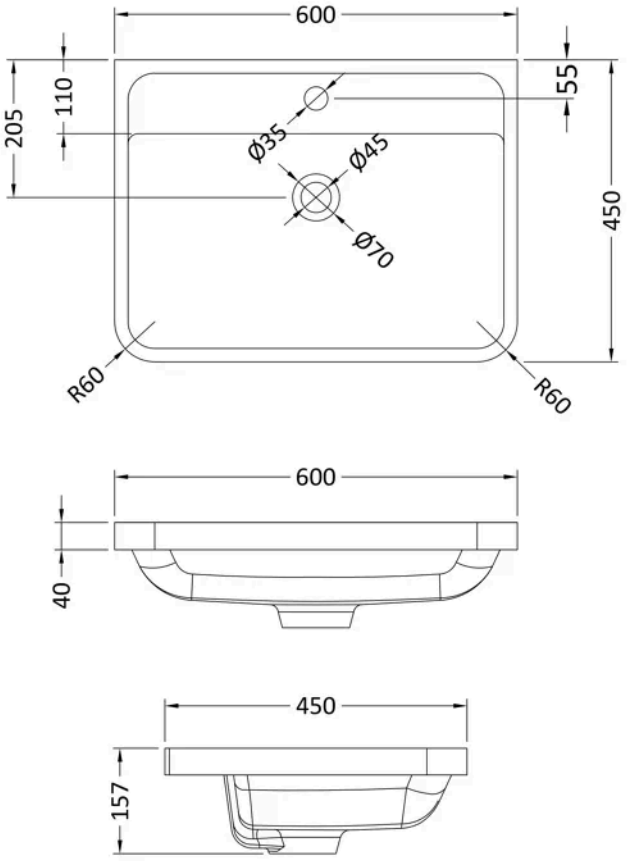

Product Dimensions

Product	157 x 450 x 600mm (H x W x D)
Packaged	167 x 640 x 470mm (H x W x D)
Nett Weight	12.82 kg
Packaged Weight	12.82 kg

Packaging Details

Box Qty	1

Product Details

Country of Origin	China
Product Material	Polymarble
Colour/Finish	White
Style	Contemporary
Ce Certified	Yes
Inner Bowl Height	110 mm
No. Of Tapholes	1
Number Of Bowls	1
Overflow Included	Yes
Tap Included	No
Waste Included	No

© ROXOR Group

Sales Code: SY-GE60WHDWPG **Barcode:** 5056474586156 **Brand:** Synergy **Description:** Synergy Gero 600 2 Drawer WH , PG

Product Image Not Available

Technical Drawing Not Available

Product Dimensions

Product	500 x 596 x 445mm (H x W x D)
Packaged	550 x 500 x 645mm (H x W x D)
Nett Weight	27 kg
Packaged Weight	27 kg

Packaging Details

Box Qty	1

Product Details

Country of Origin	China
Product Material	Mdf Painted Matt
Colour/Finish	Pebble Grey
Mount Type	Wall Hung
Style	Contemporary
Construction Method	Cam & Wood Dowel
Construction Type	Rigid
Fascia Finish	Mfc Painted Matt
Handles Included	Yes
Material Thickness	18 mm
No. Drawers	2

© ROXOR Group

Sales Code: SY-GEHCR **Barcode:** 5056474585975 **Brand:** Synergy **Description:** Synergy Gero 320mm Chrome D Handle



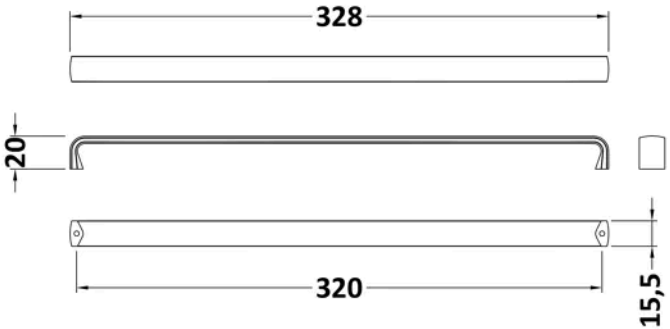

Product Dimensions

Product	20 x 328 x 16mm (H x W x D)
Packaged	20 x 40 x 320mm (H x W x D)
Nett Weight	0.16 kg
Packaged Weight	0.16 kg

Packaging Details

Box Qty	1
Label Size (mm)	50 x 100
Label Colour	White
Label Qty	1.0000

Product Details

Country of Origin	China
Product Material	Stainless Steel
Colour/Finish	Chrome
Style	Contemporary
Handle Type	D Shape
Fixings Included	Yes

© ROXOR Group