Sales Code: SY-GE02-BL **Barcode:** 5056474585609 **Brand:** Synergy **Description:** Synergy Gero Soft Black 600mm 2 Drawer Floor Standing Unit



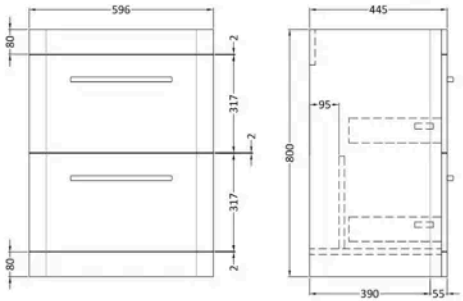

Product Dimensions

Product	800 x 596 x 445mm (H x W x D)
Packaged	850 x 600 x 455mm (H x W x D)
Nett Weight	31.95 kg
Packaged Weight	31.95 kg

Product Details

Country of Origin	China
Product Material	Mdf Painted Matt
Colour/Finish	Soft Black
Mount Type	Floor
Style	Contemporary
Handle Type	D Shape
Construction Method	Cam & Wood Dowel
Ce Certified	Yes
Construction Type	Rigid
Fascia Finish	Mfc Painted Matt
Fsc Certified	Yes
Handles Included	Yes
Material Thickness	18 mm
No. Drawers	2

© ROXOR Group

Sales Code: SY-GE60FSDWBL **Barcode:** 5056474586118 **Brand:** Synergy **Description:** Synergy Gero 600 2 Drawer FS , SB



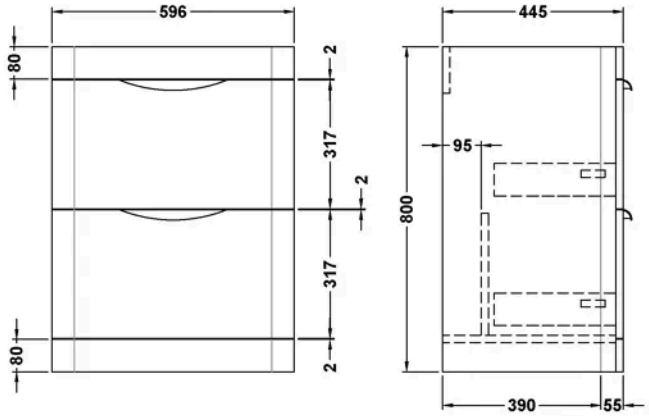

Product Dimensions

Product	800 x 596 x 445mm (H x W x D)
Packaged	850 x 600 x 455mm (H x W x D)
Nett Weight	30 kg
Packaged Weight	31.8 kg

Packaging Details

Box Qty	1

Product Details

Country of Origin	China
Product Material	Mdf Painted Matt
Colour/Finish	Soft Black
Mount Type	Floor
Style	Contemporary
Construction Method	Cam & Wood Dowel
Construction Type	Rigid
Fascia Finish	Mfc Painted Matt
Material Thickness	18 mm
No. Drawers	2

© ROXOR Group

Sales Code: SY-GEHCR **Barcode:** 5056474585975 **Brand:** Synergy **Description:** Synergy Gero 320mm Chrome D Handle



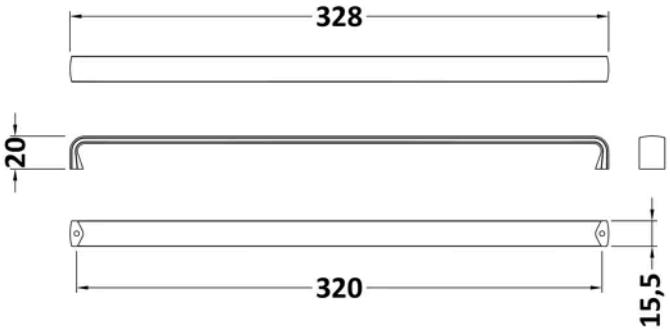

Product Dimensions

Product	20 x 328 x 16mm (H x W x D)
Packaged	20 x 40 x 320mm (H x W x D)
Nett Weight	0.16 kg
Packaged Weight	0.16 kg

Packaging Details

Box Qty	1
Label Size (mm)	50 x 100
Label Colour	White
Label Qty	1.0000

Product Details

Country of Origin	China
Product Material	Stainless Steel
Colour/Finish	Chrome
Style	Contemporary
Handle Type	D Shape
Fixings Included	Yes

© ROXOR Group