Sales Code: SY-FSB591-A **Barcode:** 5064007020664 **Brand:** Synergy **Description:** Synergy Jayden 1500mm Left Hand Corner Bath



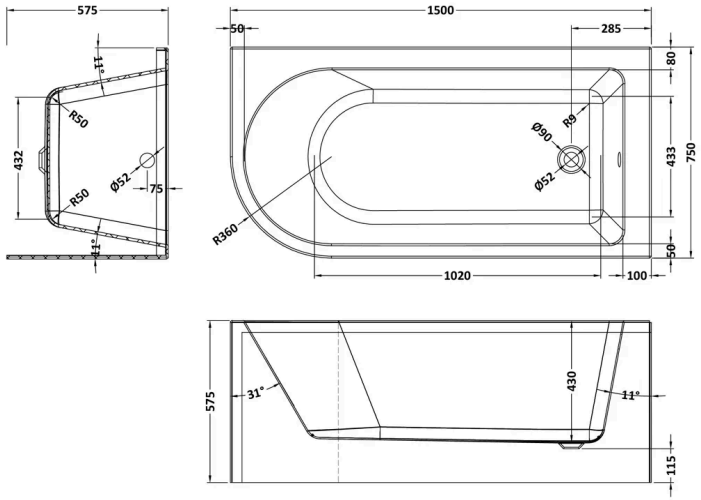

Product Dimensions

Product	575 x 750 x 1500mm (H x W x L)
Packaged	575 x 800 x 1500mm (H x W x D)
Nett Weight	39 kg
Packaged Weight	39 kg

Packaging Details

Box Qty	1

Product Details

Volume	145 Litre
Country of Origin	China
Product Material	Acrylic
Colour/Finish	Gloss White
Style	Contemporary
Fixings Included	No
Bath Panel Included	Yes
Ce Certified	Yes
Declaration Of Performance	No
Displaced Capacity	75 Litre
Includes Grips	No
Leg Set Included	Yes
No. Of Tapholes	No Tapholes
Overflow Included	No
Tap Included	No
Ukca Certified	Yes
Waste Included	No

© ROXOR Group