Sales Code: SY-FSB407-A **Barcode:** 5056474545337 **Brand:** Synergy **Description:** Synergy Bolsena 1600mm Freestanding Bath With Waste



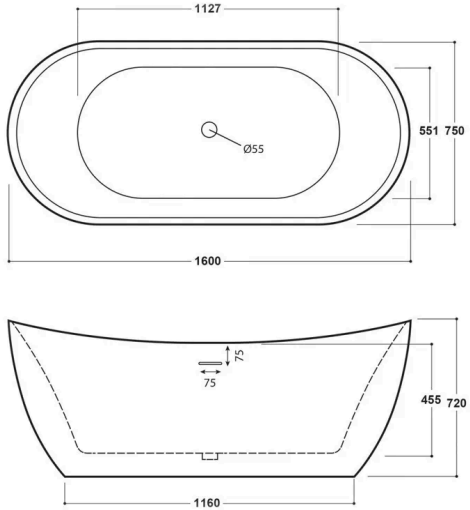

Product Dimensions

Product	720 x 750 x 1600mm (H x W x L)
Packaged	760 x 780 x 1640mm (H x W x D)
Nett Weight	52 kg
Packaged Weight	52 kg

Packaging Details

Box Qty	1

Product Details

Volume	211 Litre
Country of Origin	China
Product Material	Acrylic
Colour/Finish	White
Style	Contemporary
Bath Panel Included	No
Ce Certified	Yes
Displaced Capacity	141 Litre
Hydrotherapy System	No
Includes Grips	No
No. Of Tapholes	No Tapholes
Overflow Included	Yes
Tap Included	No
Waste Included	Yes

© ROXOR Group