Sales Code: SY-FSB405-A **Barcode:** 5056474501203 **Brand:** Synergy **Description:** Synergy Mardi 1700mm Freestanding Bath With Waste

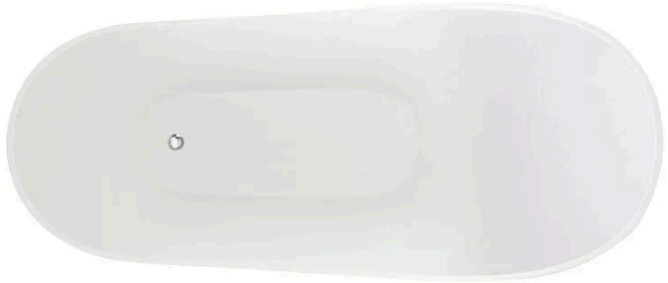

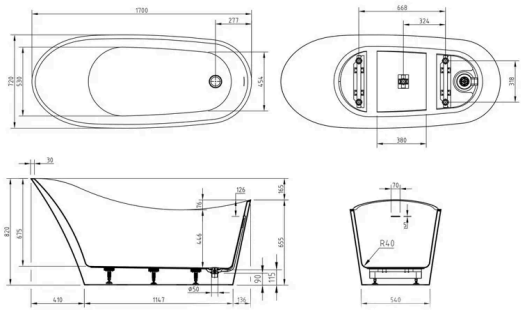

Product Dimensions

Product	820 x 720 x 1700mm (H x W x L)
Packaged	860 x 750 x 1730mm (H x W x D)
Nett Weight	43 kg
Packaged Weight	53 kg

Packaging Details

Box Qty	1

Product Details

Volume	354 Litre
Country of Origin	China
Product Material	Acrylic
Colour/Finish	White
Style	Contemporary
Bath Panel Included	No
Ce Certified	Yes
Displaced Capacity	284 Litre
Hydrotherapy System	No
Includes Grips	No
No. Of Tapholes	No Tapholes
Overflow Included	Yes
Tap Included	No
Waste Included	Yes

© ROXOR Group