Sales Code: SY-FSB403-A **Barcode:** 5056474509476 **Brand:** Synergy **Description:** Synergy Bolsena 1800mm Freestanding Bath With Waste



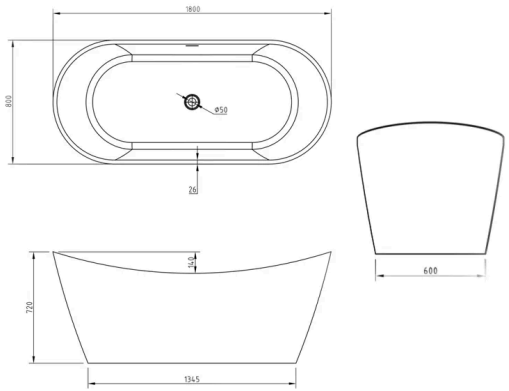

Product Dimensions

Product	720 x 800 x 1800mm (H x W x L)
Packaged	760 x 830 x 1830mm (H x W x D)
Nett Weight	53 kg
Packaged Weight	53 kg

Packaging Details

Box Qty	1

Product Details

Volume	315 Litre
Country of Origin	China
Product Material	Acrylic
Colour/Finish	White
Style	Contemporary
Bath Panel Included	No
Ce Certified	Yes
Displaced Capacity	245 Litre
Includes Grips	No
No. Of Tapholes	No Tapholes
Overflow Included	Yes
Tap Included	No
Waste Included	Yes

© ROXOR Group