Sales Code: SY-FSB351-A **Barcode:** 5056474545313 **Brand:** Synergy **Description:** Synergy Estriado 1500mm Freestanding Bath With Waste



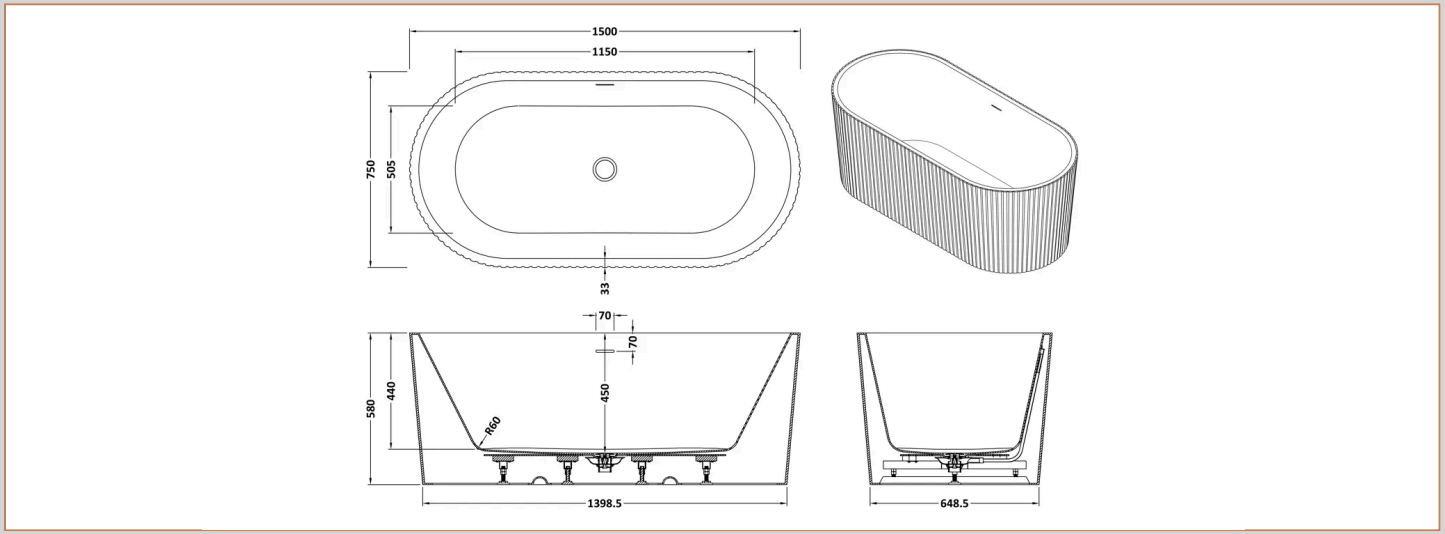

Product Dimensions

Product	580 x 750 x 1500mm (H x W x L)
Packaged	620 x 780 x 1540mm (H x W x D)
Nett Weight	35 kg
Packaged Weight	35 kg

Packaging Details

Box Qty	1

Product Details

Volume	222 Litre
Country of Origin	China
Product Material	Acrylic
Colour/Finish	Gloss White
Style	Contemporary
Bath Panel Included	No
Ce Certified	Yes
Displaced Capacity	152 Litre
Hydrotherapy System	No
Includes Grips	No
No. Of Tapholes	No Tapholes
Overflow Included	Yes
Tap Included	No
Waste Included	Yes

© ROXOR Group