Sales Code: SY-FSB321L-A **Barcode:** 5056474545290 **Brand:** Synergy **Description:** Synergy Cambridge 1685mm Left Hand Shower Bath



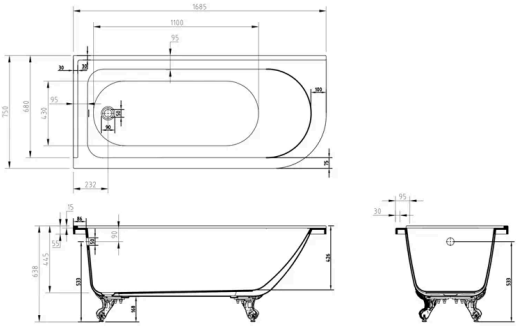

Product Dimensions

Product	638 x 750 x 1685mm (H x W x L)
Packaged	1735 x 850 x 2250mm (H x W x D)
Nett Weight	36.1 kg
Packaged Weight	36.1 kg

Product Details

Volume	293 Litre
Country of Origin	China
Product Material	Acrylic
Colour/Finish	White
Style	Contemporary
Bath Panel Included	No
Displaced Capacity	223 Litre
No. Of Tapholes	No Tapholes
Overflow Included	No
Tap Included	No
Waste Included	No

© ROXOR Group