**Sales Code:** SY-FSB311-A **Barcode:** 5056474503047 **Brand:** Synergy **Description:** Synergy Kilmory 1800mm Square Double Ended Bath



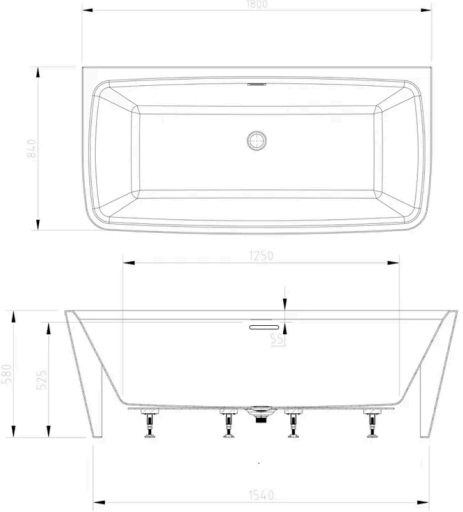


## Product Dimensions

| | |
|---|---|
| Product | 580 x 840 x 1800mm (H x W x L) |
| Packaged | 630 x 910 x 1850mm (H x W x D) |
| Nett Weight | 56 kg |
| Packaged Weight | 56 kg |

## Packaging Details

| | |
|---|---|
| Box Qty | 1 |

## Product Details

| | |
|---|---|
| Volume | 293 Litre |
| Country of Origin | China |
| Product Material | Acrylic |
| Colour/Finish | White |
| Style | Contemporary |
| Bath Panel Included | No |
| Ce Certified | Yes |
| Displaced Capacity | 223 Litre |
| Hydrotherapy System | No |
| Includes Grips | No |
| No. Of Tapholes | No Tapholes |
| Overflow Included | Yes |
| Tap Included | No |
| Waste Included | Yes |

© ROXOR Group